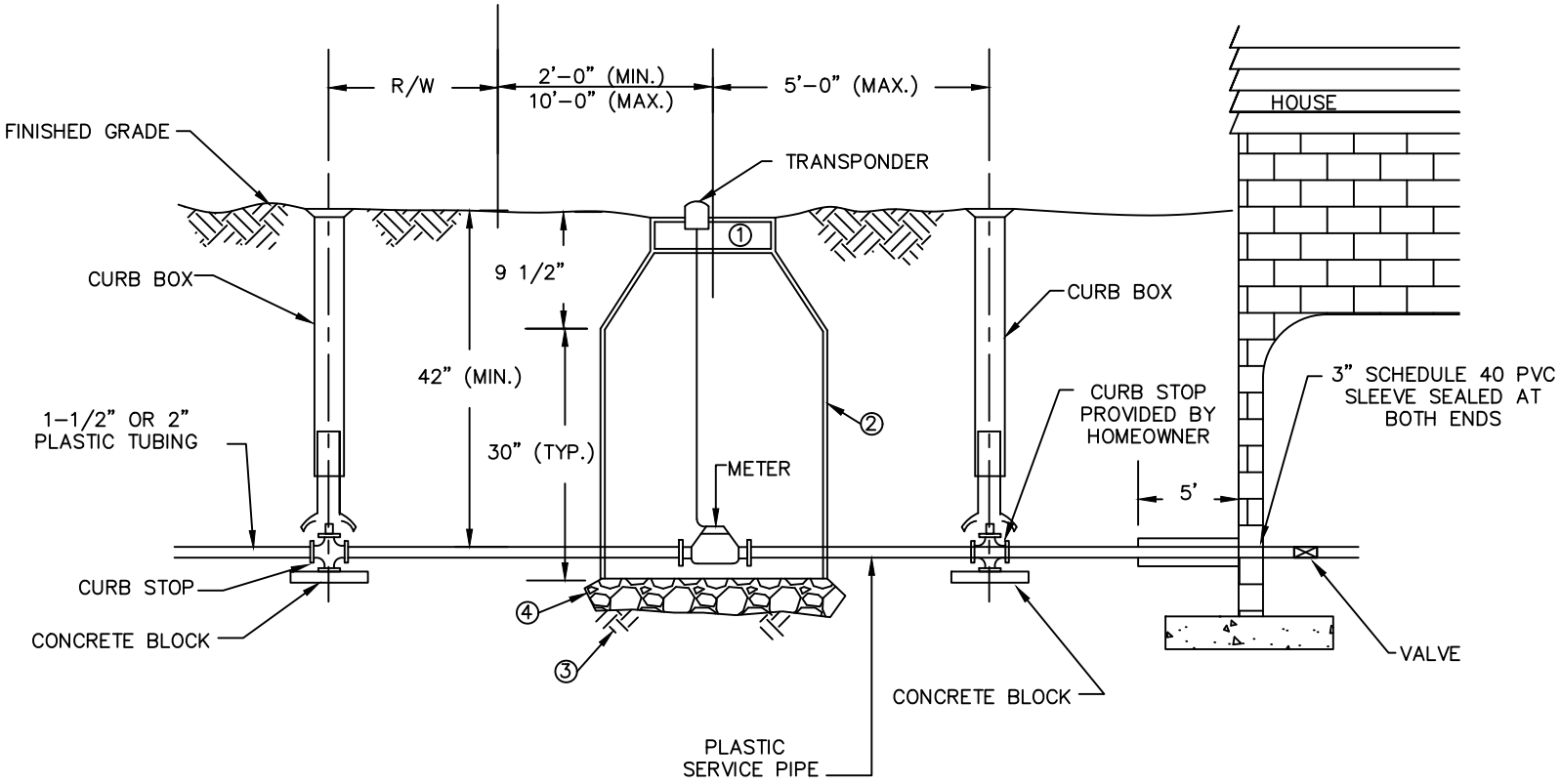

NOTE: METER INSTALLATION SHALL BE INSPECTED AND APPROVED BY THE DISTRICT

①FROSTPROOF, SINGLE LID METER BOX COVER, FORD C32-T OR APPROVED EQUIVALENT WITH A 1-27/32" HOLE FOR TRANSPONDER
②36" I.D. VIKING ENVIRONMENTAL RIB BOX, 36" I.D. HANCOR PLASTIC METER BOX, OR APPROVED EQUIVALENT
③BACKFILL COMPACTED PRIOR TO SETTING
④6" ITEM 304 GRAVEL
⑤INSTALL OUT OF TRAFFIC AREAS

TYPICAL METER BOX
1-1/2" & 2" METERS

Village of Commercial Point	
STANDARD CONSTRUCTION DWG.	
REVISED: 05/14/2018	DRAWING NO. W-45

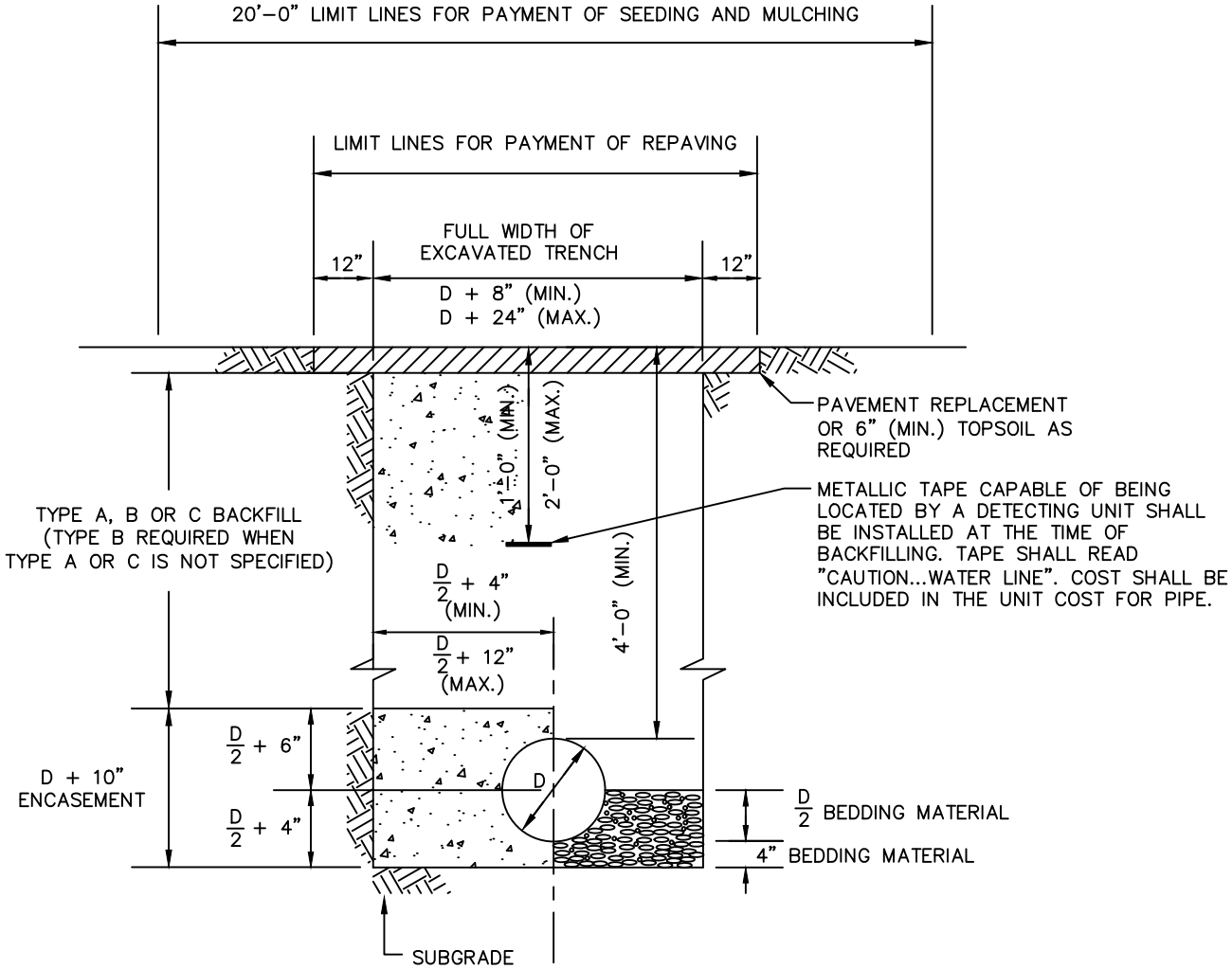

SECTION WITH ENCASEMENT

SECTION WITH BEDDING MATERIAL

NOTES:

1. ITEM NUMBERS REFER TO THE STATE OF OHIO DEPARTMENT OF TRANSPORTATION CONSTRUCTION AND MATERIAL SPECIFICATIONS.
2. AGGREGATE FOR BEDDING SHALL BE NO. 57, ITEM 703.
3. TYPE A BACKFILL SHALL BE GRANULAR MATERIAL, ITEM 304, GRADE A. TYPE A BACKFILL SHALL BE USED WHEN THE TRENCH IS 5' OR LESS FROM ANY PAVED OR GRAVEL SURFACE OR BENEATH THE PAVEMENT OR GRAVEL. COMPACTION SHALL MEET THE REQUIREMENTS OF ITEM 203.
4. TYPE B BACKFILL SHALL BE NATURAL SOIL FREE FROM STONES LARGER THAN 2" ACROSS THEIR GREATEST DIMENSION. TOPSOIL, VEGETATION, DEBRIS, RUBBISH OR FROZEN MATERIAL, COMPACTED TO 95% OF IT'S MAXIMUM LABORATORY DRY WEIGHT.
5. TYPE C BACKFILL SHALL BE NATURAL SOIL FREE FROM STONES LARGER THAN 6" ACROSS THEIR GREATEST DIMENSION. VEGETATION, DEBRIS, RUBBISH OR FROZEN MATERIAL, COMPACTED TO 90% OF IT'S MAXIMUM LABORATORY DRY WEIGHT. WHEN APPROVED BY THE ENGINEER, STONES NO LARGER THAN ONE CUBIC FOOT MAY BE DEPOSITED AT LEAST 3' ABOVE THE TOP OF THE PIPE.
6. THE EXCAVATED TRENCH WIDTH 12" ABOVE THE CONDUIT MAY BE INCREASED WITHOUT ADDITIONAL COMPENSATION.
7. RIGID PIPE SHALL INCLUDE DUCTILE IRON.
8. ENCASEMENT SHALL BE CLASS C CONCRETE.
9. SECTIONS ARE SYMMETRICAL ABOUT THE CENTERLINE.
10. TRENCH DAMNS ARE REQUIRED PER GENERAL NOTES OR CONSTRUCTION MATERIAL SPECIFICATIONS.

TYPICAL TRENCH FOR RIGID PIPE

Village of Commercial Point	
STANDARD CONSTRUCTION DWG.	
REVISED: 05/14/2018	DRAWING NO. W–1

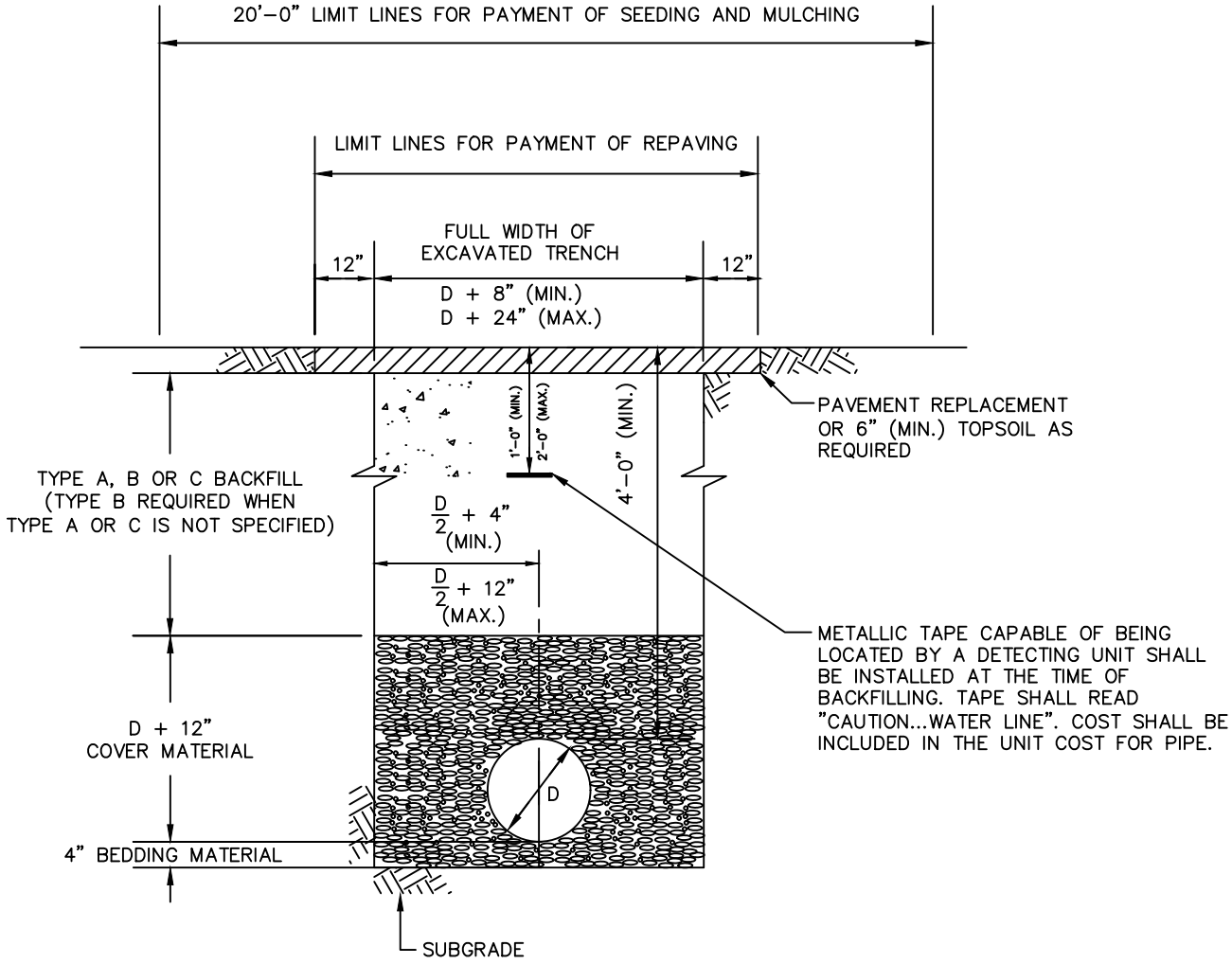

NOTES:

1. AGGREGATE FOR BEDDING AND COVER SHALL BE #57 LIMESTONE OR 3/4 #57 ROUND WASHED GRAVEL.
2. TYPE A BACKFILL SHALL BE GRANULAR MATERIAL, ITEM 304, GRADE A. TYPE A BACKFILL SHALL BE USED WHEN THE TRENCH IS 5' OR LESS FROM ANY PAVED OR GRAVEL SURFACE OR BENEATH THE PAVEMENT OR GRAVEL. COMPACTION SHALL MEET THE REQUIREMENTS OF ITEM 203.
3. TYPE B BACKFILL SHALL BE NATURAL SOIL FREE FROM STONES LARGER THAN 2" ACROSS THEIR GREATEST DIMENSION. TOPSOIL, VEGETATION, DEBRIS, RUBBISH OR FROZEN MATERIAL, COMPACTED TO 95% OF IT'S MAXIMUM LABORATORY DRY WEIGHT.
4. TYPE C BACKFILL SHALL BE NATURAL SOIL FREE FROM STONES LARGER THAN 6" ACROSS THEIR GREATEST DIMENSION. VEGETATION, DEBRIS, RUBBISH OR FROZEN MATERIAL, COMPACTED TO 90% OF IT'S MAXIMUM LABORATORY DRY WEIGHT. WHEN APPROVED BY THE ENGINEER, STONES NO LARGER THAN ONE CUBIC FOOT MAY BE DEPOSITED AT LEAST 3' ABOVE THE TOP OF THE PIPE.
5. THE EXCAVATED TRENCH WIDTH 12" ABOVE THE CONDUIT MAY BE INCREASED WITHOUT ADDITIONAL COMPENSATION.
6. FLEXIBLE PIPE SHALL INCLUDE PVC AND POLYETHYLENE.
7. TRENCH DAMNS ARE REQUIRED PER GENERAL NOTES OR CONSTRUCTION MATERIAL SPECIFICATIONS

TYPICAL TRENCH FOR FLEXIBLE PIPE

Village of Commercial Point	
STANDARD CONSTRUCTION DWG.	
REVISED: 05/14/2018	DRAWING NO. W–1

NUMBER OF JOINTS	GALLONS PER HOUR		
	6" PIPE	8" PIPE	12" PIPE
1	.01	.01	.02
2	.02	.03	.04
3	.03	.04	.06
4	.04	.05	.08
5	.05	.07	.10
6	.06	.08	.12
7	.07	.09	.14
8	.08	.11	.16
9	.09	.12	.18
10	.10	.13	.20
11	.11	.15	.22
12	.12	.16	.24
13	.13	.17	.26
14	.14	.18	.28
15	.15	.20	.30
16	.16	.21	.32
17	.17	.22	.34
18	.18	.24	.36
19	.19	.25	.38
20	.20	.26	.40
21	.21	.28	.42
22	.22	.29	.44
23	.23	.30	.46
24	.24	.32	.48
25	.25	.33	.50
26	.26	.34	.52
27	.27	.36	.54
28	.28	.37	.56
29	.29	.38	.58
30	.30	.40	.60
31	.31	.41	.62
32	.32	.42	.64
33	.33	.44	.65
34	.34	.45	.67
35	.35	.46	.70
36	.36	.48	.72
37	.37	.49	.73
38	.38	.50	.75
39	.39	.52	.77
40	.40	.53	.79

NUMBER OF JOINTS	GALLONS PER HOUR		
	6" PIPE	8" PIPE	12" PIPE
41	.41	.54	.81
42	.42	.56	.83
43	.43	.57	.85
44	.44	.58	.87
45	.45	.60	.89
46	.46	.61	.91
47	.47	.62	.93
48	.48	.64	.95
49	.49	.65	.97
50	.50	.66	.99
51	.51	.67	1.01
52	.52	.69	1.03
53	.53	.70	1.05
54	.54	.71	1.07
55	.55	.73	1.09
56	.56	.74	1.11
57	.57	.75	1.13
58	.58	.77	1.15
59	.59	.78	1.17
60	.60	.79	1.19
61	.61	.81	1.21
62	.62	.82	1.23
63	.63	.83	1.25
64	.64	.85	1.27
65	.65	.86	1.29
66	.66	.87	1.31
67	.66	.89	1.33
68	.67	.90	1.35
69	.68	.91	1.37
70	.69	.93	1.39
71	.70	.94	1.41
72	.71	.95	1.43
73	.72	.97	1.45
74	.73	.98	1.47
75	.74	.99	1.49
76	.75	1.01	1.51
77	.76	1.02	1.53
78	.77	1.03	1.55
79	.78	1.05	1.57
80	.79	1.06	1.59

NUMBER OF JOINTS	GALLONS PER HOUR		
	6" PIPE	8" PIPE	12" PIPE
81	.80	1.07	1.61
82	.81	1.09	1.63
83	.82	1.10	1.65
84	.83	1.11	1.67
85	.84	1.12	1.69
86	.85	1.14	1.71
87	.86	1.15	1.73
88	.87	1.16	1.75
89	.88	1.18	1.77
90	.89	1.19	1.79
91	.90	1.20	1.81
92	.91	1.22	1.83
93	.92	1.23	1.85
94	.93	1.24	1.87
95	.94	1.26	1.89
96	.95	1.27	1.91
97	.96	1.28	1.93
98	.97	1.30	1.95
99	.98	1.31	1.97
100	.99	1.32	1.99
200	1.99	2.65	3.97
300	2.98	3.97	5.96
400	3.97	5.30	7.94
500	4.97	6.62	9.93

FORMULA: $L = \frac{ND\sqrt{P}}{7400}$

WHERE L = LEAKAGE (GAL./HR.)
N = NUMBER OF JOINTS
D = NOMINAL DIAMETER (IN.)
P = TEST PRESSURE (150 PSI)

THESE CALCULATIONS ARE BASED ON CURRENT AWWA C600 SPECIFICATIONS, SECTION 4.1 – HYDROSTATIC TESTING. PRESSURE DURING TESTING SHALL BE MAINTAINED AT 150 PSI AS SHOWN HEREIN OR AT ONE AND ONE HALF TIMES THE WORKING PRESSURE, WHICHEVER IS GREATER.

ALLOWABLE LEAKAGE PER HOUR (WATER LINE)

Village of Comercial Point

STANDARD CONSTRUCTION DWG.

REVISED: 05/14/2018

DRAWING NO. W-2

RUN	BRANCH																							
	3"			4"			6"			8"			12"			16"			20"			24"		
	L	D	V	L	D	V	L	D	V	L	D	V	L	D	V	L	D	V	L	D	V	L	D	V
3"	12	5	0.5																					
4"	10	6	0.5	11	8	0.8																		
6"	9	7	0.5	11	8	0.8	18	12	1.9															
8"	8	8	0.5	10	9	0.7	18	12	1.9	23	16	3.5												
12"	6	12	0.6	8	12	0.8	18	12	1.9	23	16	3.5	38	22	8.7									
16"	6	16	0.8	6	16	0.8	14	16	2.0	20	18	3.3	36	23	8.7	49	30	13.6						
20"	6	20	1.0	6	20	1.0	11	20	1.9	18	20	3.3	35	24	8.7	46	32	13.6	60	38	26.5			
24"	6	24	1.2	6	24	1.2	9	24	1.9	15	24	3.3	30	28	8.7	42	36	14.0	54	42	26.3	68	48	45.4

V = VOLUME OF CONCRETE IN CUBIC FEET

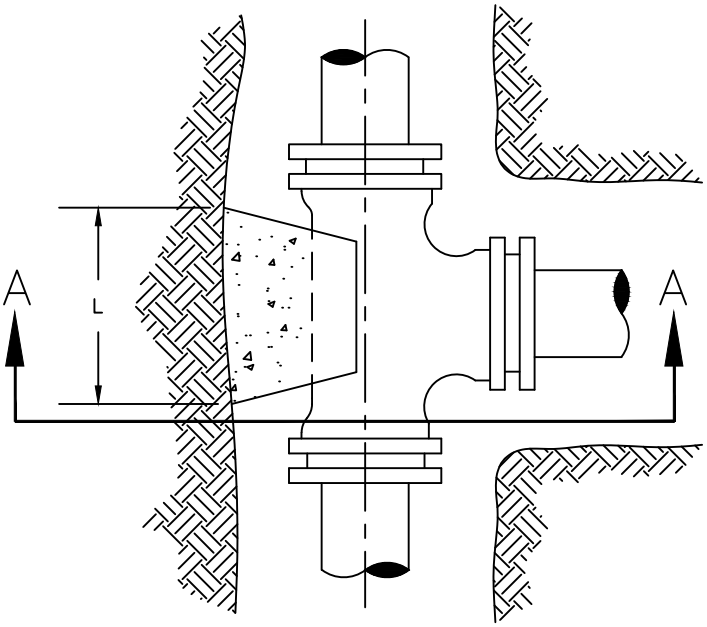

PLAN VIEW

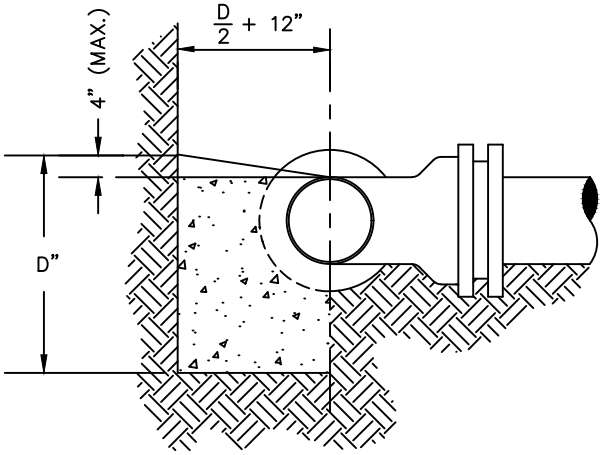

SECTION A-A

NOTES:

1. CONCRETE FOR BACKING SHALL BE CLASS C.
2. BACKING SHALL BE DESIGNED FOR 3000 PSF SOIL BEARING.
3. REINFORCING STEEL SHALL BE USED AS DIRECTED BY THE ENGINEER.
4. CONCRETE SHALL BE PLACED AGAINST UNDISTURBED EARTH.
5. PROVIDE CLEARANCE FOR REMOVAL OF BOLTS.

BACKING FOR TEES

Village of Commercial Point

STANDARD CONSTRUCTION DWG.

REVISED: 05/14/2018

DRAWING NO. W-3

SIZE OF PIPE	DEGREE OF BEND											
	11–1/4°			22–1/2°			45°			90°		
	L	D	V	L	D	V	L	D	V	L	D	V
3”	4	3	0.1	6	4	0.2	10	4	0.3	10	4	0.3
4”	5	4	0.2	9	5	0.4	14	5	0.6	14	5	0.6
6”	8	6	0.5	12	7	0.7	20	8	1.4	18	9	1.7
8”	9	8	0.7	16	9	1.4	24	12	2.7	25	11	4.0
12”	14	12	1.8	24	14	3.6	36	18	6.8	32	18	10.7
16”	18	16	3.4	32	18	6.7	36	32	13.4	41	26	25.4
20”	25	20	6.4	30	30	11.5	49	36	20.5	50	32	46.5
24”	27	24	9.0	39	34	18.4	60	42	35.0	58	40	77.7

V = VOLUME OF CONCRETE IN CUBIC FEET

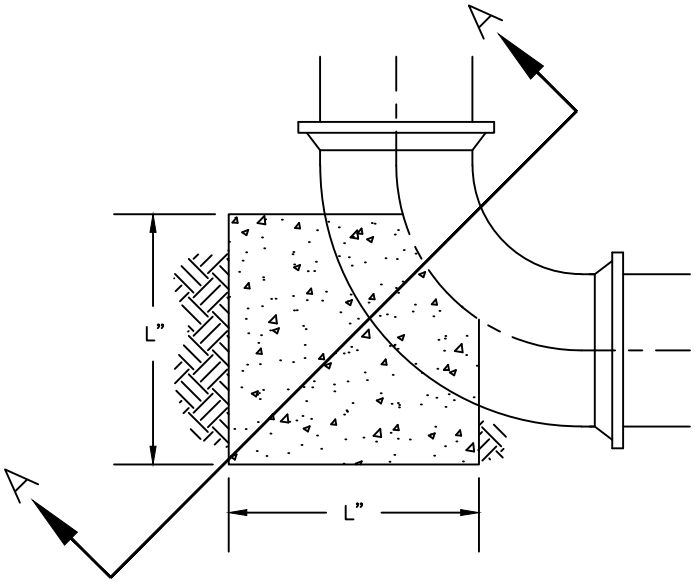

90° BENDS

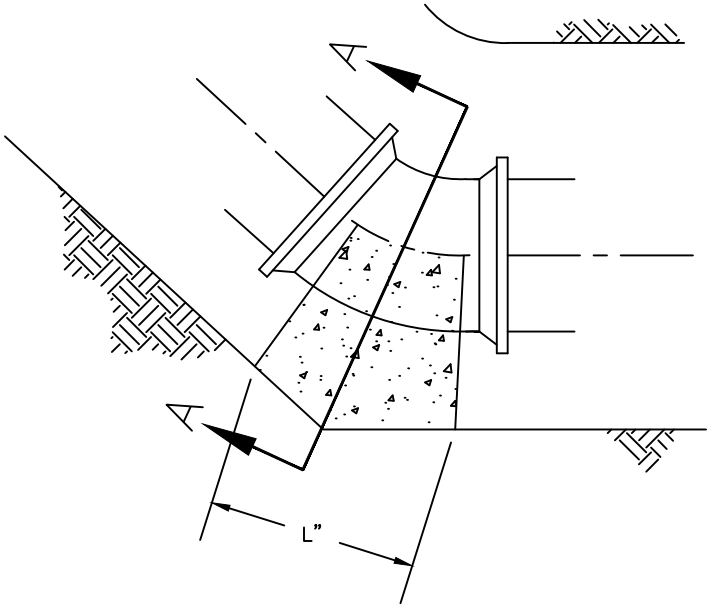

BENDS LESS THAN 90°

NOTES:

1. CONCRETE FOR BACKING SHALL BE CLASS C.
2. BACKING SHALL BE DESIGNED FOR 3000 PSF SOIL BEARING.
3. REINFORCING STEEL SHALL BE USED AS DIRECTED BY THE ENGINEER.
4. CONCRETE SHALL BE PLACED AGAINST UNDISTURBED EARTH.
5. PROVIDE CLEARANCE FOR REMOVAL OF BOLTS.

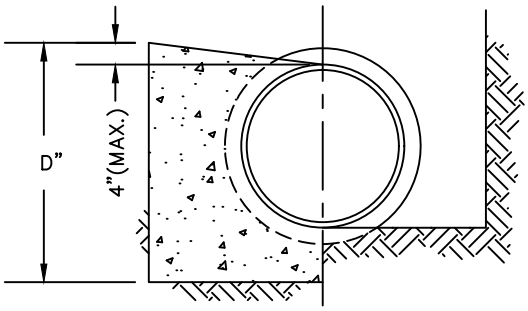

SECTION A-A

BACKING FOR BENDS

Village of Commercial Point

STANDARD CONSTRUCTION DWG.

REVISED: 05/14/2018

DRAWING NO. W–4

SIZE OF PIPE	DEGREE OF BEND															
	11–1/4°				22–1/2°				45°				90°			
	L	W	H	V	L	W	H	V	L	W	H	V	L	W	H	V
3"	12	18	12	1.5	13	25	16	3.0	18	30	19	5.9	25	30	24	10.4
4"	12	24	16	2.6	16	30	18	5.0	22	36	24	11.0	27	48	25	18.7
6"	12	48	18	6.0	15	43	36	13.4	30	55	24	22.9	37	54	36	41.6
8"	12	63	24	10.5	18	57	34	20.2	36	57	33	39.2	47	60	46	75.0
12"	20	54	36	22.6	37	62	37	49.0	48	62	51	87.9	66	66	66	166.4
16"	31	65	38	44.3	60	65	39	88.1	65	65	65	159.2	72	96	72	288.0
20"	45	70	40	72.8	56	70	60	136.2	72	76	78	247.0	86	108	84	451.8
24"	41	72	54	92.3	67	74	69	198.0	88	84	84	359.1	96	120	96	640.0

V = VOLUME OF CONCRETE IN CUBIC FEET

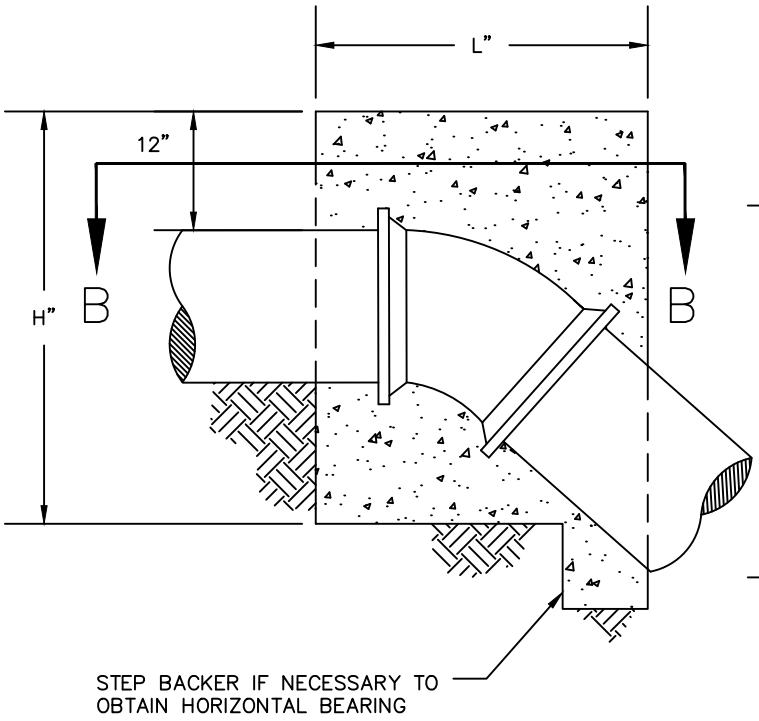

SECTION A-A

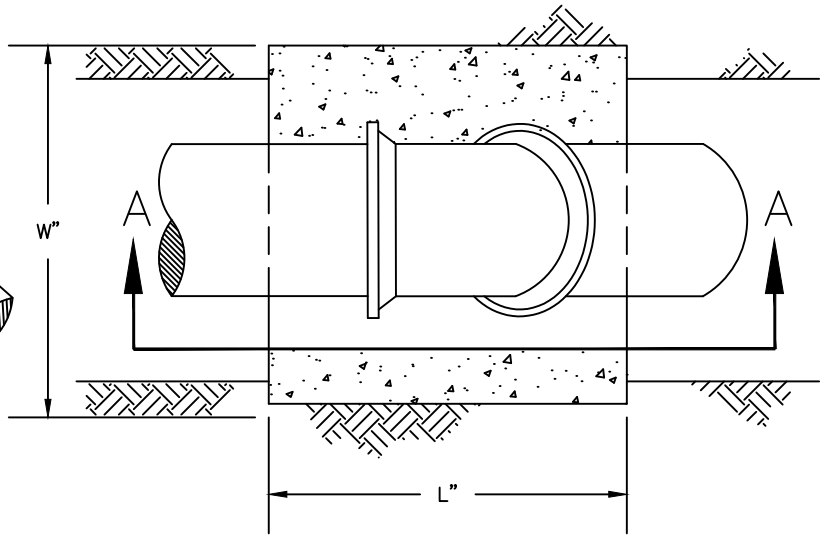

SECTION B-B

NOTES:

1. CONCRETE FOR BACKING SHALL BE CLASS C.
2. BACKING SHALL BE DESIGNED FOR 3000 PSF SOIL BEARING.
3. REINFORCING STEEL SHALL BE USED AS DIRECTED BY THE ENGINEER.
4. CONCRETE SHALL BE PLACED AGAINST UNDISTURBED EARTH.
5. BACKING SHALL BE CENTERED HORIZONTALLY ON BEND.
6. ANY PIPE WHICH COMES IN CONTACT WITH THE CONCRETE ENCASEMENT SHALL BE DUCTILE IRON.

BACKING FOR VERTICAL BENDS (OVER BENDS ONLY)

Village of Commercial Point

STANDARD CONSTRUCTION DWG.

REVISED: 05/14/2018

DRAWING NO. W–5

	SIZE	L	V
GATE VALVES	3"	15	0.31
	4"	16	0.33
	6"	17	0.36
	8"	20	0.42
	12"	24	0.50
	16"	30	0.63
BUTTERFLY VALVES	20"	36	0.75
	24"	42	0.88
	30"	48	1.00

V = VOLUME OF CONCRETE IN CUBIC FEET

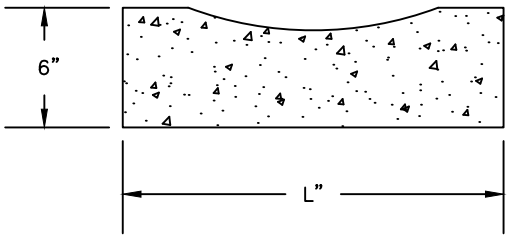

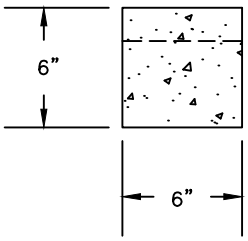

NOTES:

1. CONCRETE FOR BACKING SHALL BE CLASS C.
2. BACKING SHALL BE DESIGNED FOR 3000 PSF SOIL BEARING.
3. CONCRETE SHALL BE PLACED AGAINST UNDISTURBED EARTH.
4. PROVIDE CLEARANCE FOR REMOVAL OF BOLTS.

CONCRETE VALVE SUPPORTS

Village of commercial Point

STANDARD CONSTRUCTION DWG.

REVISED: 05/14/2018

DRAWING NO. W-6

SIZE OF PIPE	H	B	L (PVC)	L (DIP)	B
6"	8	1	20	18	2.52
8"	12	1	20	18	4.00
12"	23	3	20	18	8.64
16"	37	3	20	18	15.39

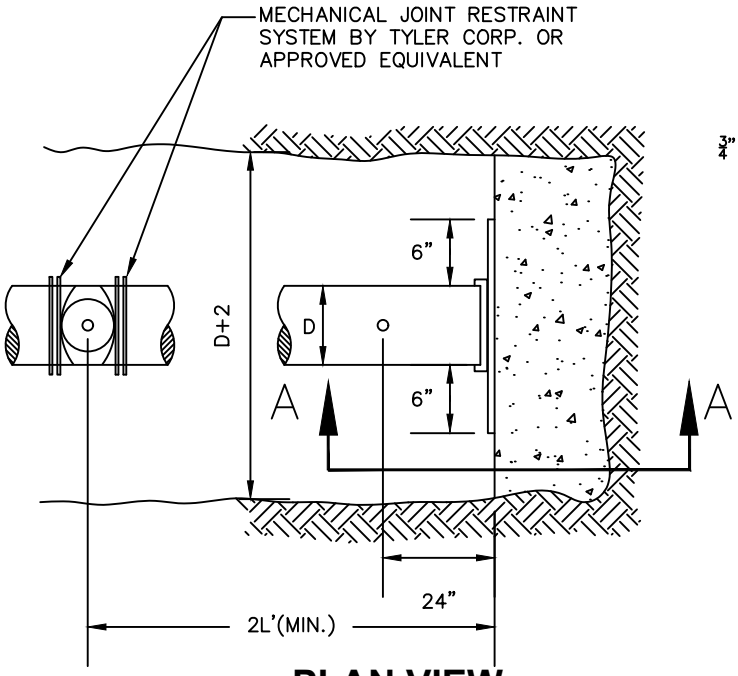

PLAN VIEW

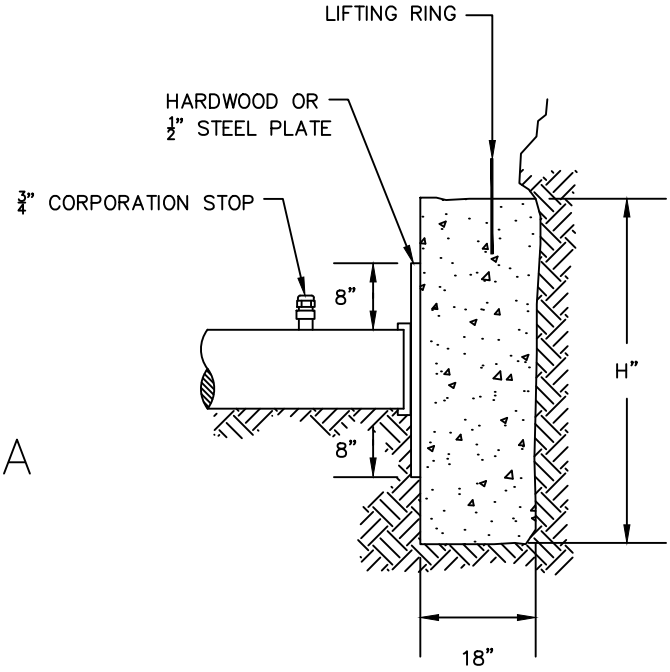

SECTION A-A

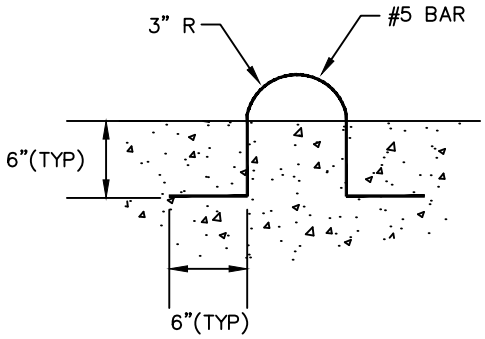

LIFTING RING DETAIL

NOTES:

1. CONCRETE FOR BACKING SHALL BE CLASS C.
2. BACKING SHALL BE DESIGNED FOR 3000 PSF SOIL BEARING.
3. CONCRETE SHALL BE PLACED AGAINST UNDISTURBED EARTH.
4. END OF PIPE SHALL BE CAPPED OR PLUGGED.
5. STEEL PLATE SHALL BE GREASED WHERE IN CONTACT WITH CONCRETE BACKING.
6. PLUG HOLES SHALL BE INSTALLED AT ALL END-OF-LINE STUBS AT THE THRUST BLOCK.

THRUST BLOCK DETAIL

Village of Commercial Point

STANDARD CONSTRUCTION DWG.

REVISED:	DRAWING NO.
05/14/2018	W-7

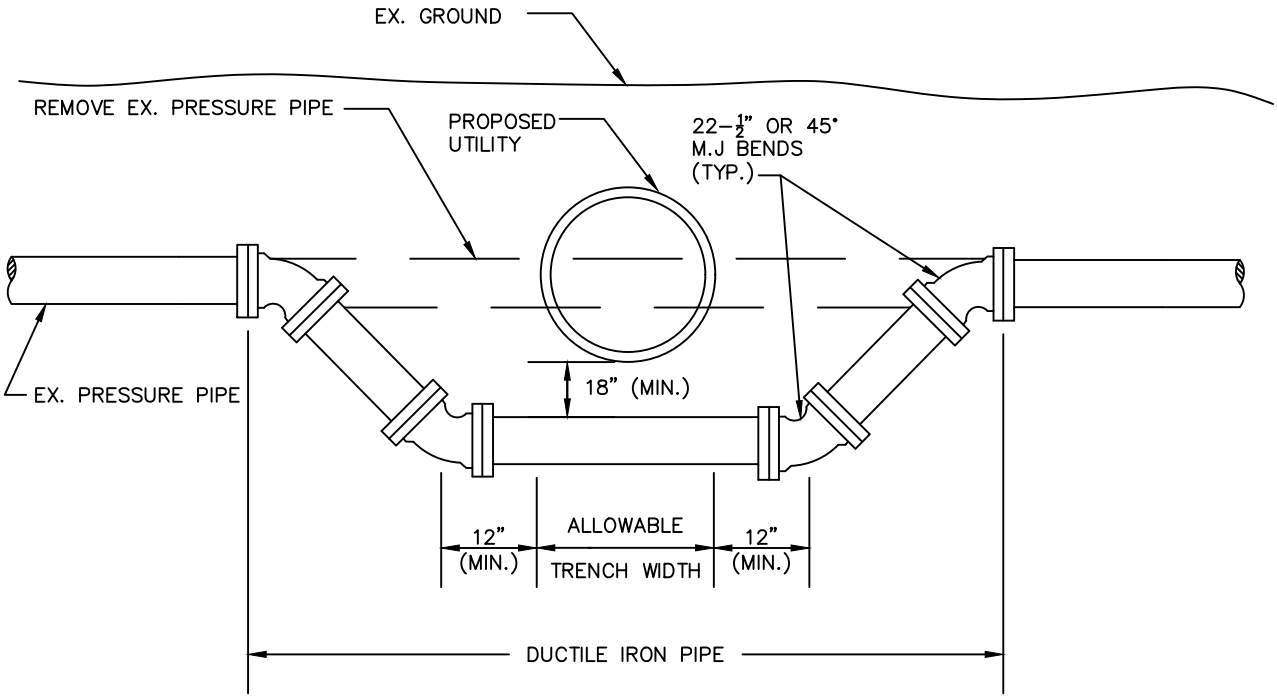

NOTES:

1. TIME AND DURATION OF SHUTDOWN SHALL BE DETERMINED OR APPROVED BY THE OWNER OF THE PRESSURE PIPE.
2. THE CONTRACTOR SHALL NOTIFY ANY CUSTOMERS AFFECTED BY THE PROPOSED WORK AT LEAST 24 HOURS IN ADVANCE OF SHUTDOWN.
3. ALL BENDS SHALL BE SECURED BY RESTRAINING GLANDS, RODDING OR OTHER METHODS AS APPROVED BY THE ENGINEER TO RESTORE MAIN SERVICE AS SOON AS POSSIBLE.
4. THE RELOCATED LINES SHALL BE LAID TO THE NEW LINE AND GRADE, TESTED AND DISINFECTED AS REQUIRED PRIOR TO SHUTDOWN OF EXISTING MAIN AND CONNECTION OF THE RELOCATED LINES TO THE EXISTING MAIN.
5. ALL WATER LINES SHALL BE DISINFECTED BE SWABBING WITH A 5% HYPOCHLORITE SOLUTION IN ACCORDANCE WITH THE APPLICABLE SECTIONS OF AWWA C651.

TYPICAL PRESSURE PIPE LOWERING

Village of Commercial Point	
STANDARD CONSTRUCTION DWG.	
REVISED: 05/14/2018	DRAWING NO. W-10

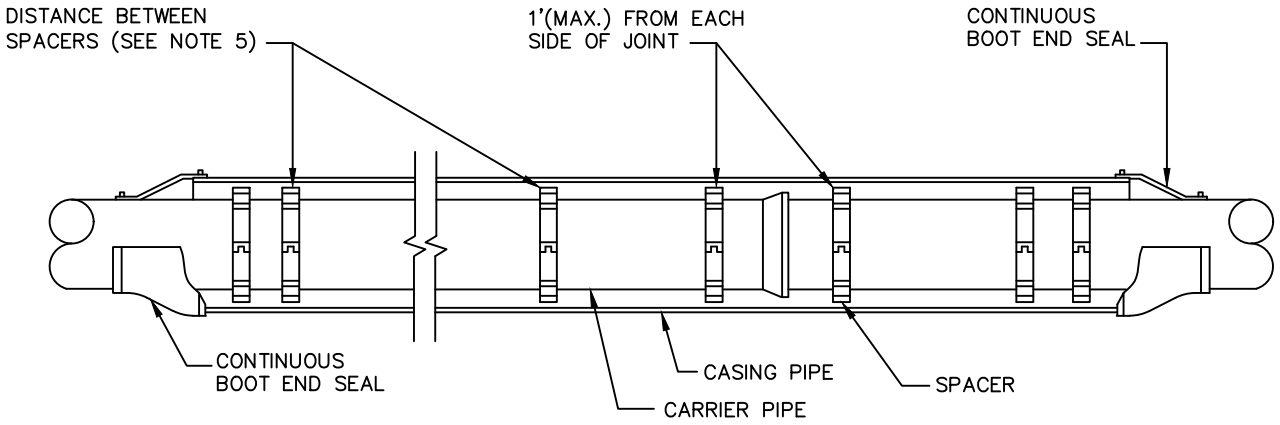

TYPICAL CASING SPACER CONFIGURATION

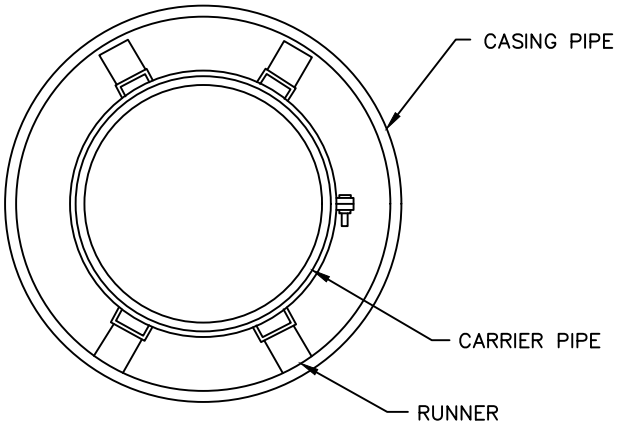

SECTION

NOTES:

1. CASING PIPE SHALL BE BITUMINOUS COATED INSIDE AND OUT, INSTALLED BY JACKING, WITH A MINIMUM WALL THICKNESS AS SHOWN IN THE TABLE OR MEETING THE REQUIREMENTS OF THE RECEIVING AUTHORITY.
2. CASING SPACERS SHALL BE CCI MODELS CSS8 AND CSS12, CONSTRUCTED OF CIRCULAR STAINLESS STEEL BANDS, THAT BOLT TOGETHER TO FORM A SHELL AROUND THE CARRIER PIPE. THE CASING SPACER SHALL BE LINED WITH A RIBBED EPDM EXTRUSION DESIGNED TO OVERLAP THE EDGES OF THE SHELL AND PREVENT SLIPPAGE. THE SPACER SHALL BE DESIGNED WITH RISERS AND RUNNERS TO SUPPORT THE CARRIER PIPE WITHIN THE CASING AND MAINTAIN A MINIMUM CLEARANCE OF 1.00" BETWEEN THE CASING ID AND THE CARRIER PIPE OD. SPACERS SHALL BE INSTALLED 3 PER EVERY 20' MIN. AND 1' INSIDE EACH END. RECOMMENDED POSITIONING OF THE SPACERS IS ONE PLACED 1–2 FEET ON EITHER SIDE OF THE BELL JOINT AND ONE EVERY 6–8 FEET APART THEREAFTER FOR A TOTAL OF THREE CASING SPACERS PER JOINT, OR AS DIRECTED BY THE MANUFACTURER.
3. END SPACERS SHALL BE ADVANCE PRODUCTS & SYSTEMS, INC. OR APPROVED EQUIVALENT.
4. WHEN DUCTILE IRON PIPE IS USED, THE JOINTS SHALL BE RESTRAINED WITH FIELDLOK GASKETS OR APPROVED EQUIVALENT.
5. WHEN PVC PIPE IS USED, THE JOINTS SHALL BE RESTRAINED WITHJCM SUR–GRIP RESTRAINERS OR APPROVED EQUIVALENT.
6. DIMENSIONS BETWEEN SPACERS FOR PVC PIPE SHALL BE 6 FEET MAXIMUM. DIMENSIONS BETWEEN SPACERS FOR DUCTILE IRON PIPE SHALL BE 8 FEET MAXIMUM.
7. THE QUANTITY OF RUNNERS IS IN ACCORDANCE WITH THE SIZE OF THE CARRIER PIPE AS FOLLOWS:
   TO 14" DIA.–4 RUNNERS
   16"–36" DIA.–6 RUNNERS
   38"–48" DIA.–8 RUNNERS
8. THE MAXIMUM GAP BETWEEN RUNNERS & CASING PIPE SHALL BE 1".

CARRIER	CASING	
INSIDE DIAMETER	MINIMUM DIAMETER	MAXIMUM WALL THICKNESS
2"	8"	0.188"
3"	10"	0.188"
4"	10"	0.188"
6"	14"	0.219"
8"	16"	0.219"
10"	18"	0.250"
12"	20"	0.281"
15"(PVC)	24"	0.344"
16"	24"	0.344"
18"	28"	0.406"
20"	28"	0.406"
24"	36"	0.469"
27"(PVC)	42"	0.500"
30"	42"	0.500"
36"	48"	0.675"

CASING PIPE

Village of
Commercial Point

STANDARD
CONSTRUCTION DWG.

REVISED:
05/14/2018

DRAWING NO.
W–11

MINIMUM ROAD & CURB UNDERDRAIN REPLACEMENT MATERIAL SHALL BE: PERFORATED CONCRETE: ITEM 706.06 (ODOTCMS) CONCRETE DRAIN TILE: ITEM 706.07 (OOOTCMS) VITRIFIED CLAY: ITEM 706.08 (OOOTCMS) PERFORATED PVC: ITEM 707.17 (ODOTCMS) HEAVY DUTY CORRUGATED POLYETHYLENE SLOTTED DRAIN: ITEM 707.16 (ODOTCMS)

MINIMUM DRAIN TILE REPLACEMENT MATERIAL SHALL BE: PVC: ASTM 2241. SDR 26 DUCTILE IRON: AWWA C151, CLASS 50 STEEL PIPE: ASTM 1J39-B CONCRETE: ITEM 706.02 (OOOTCMS) POLYETHYLENE: ITEM 707.16. S.S. 944 (OOOTCMS)

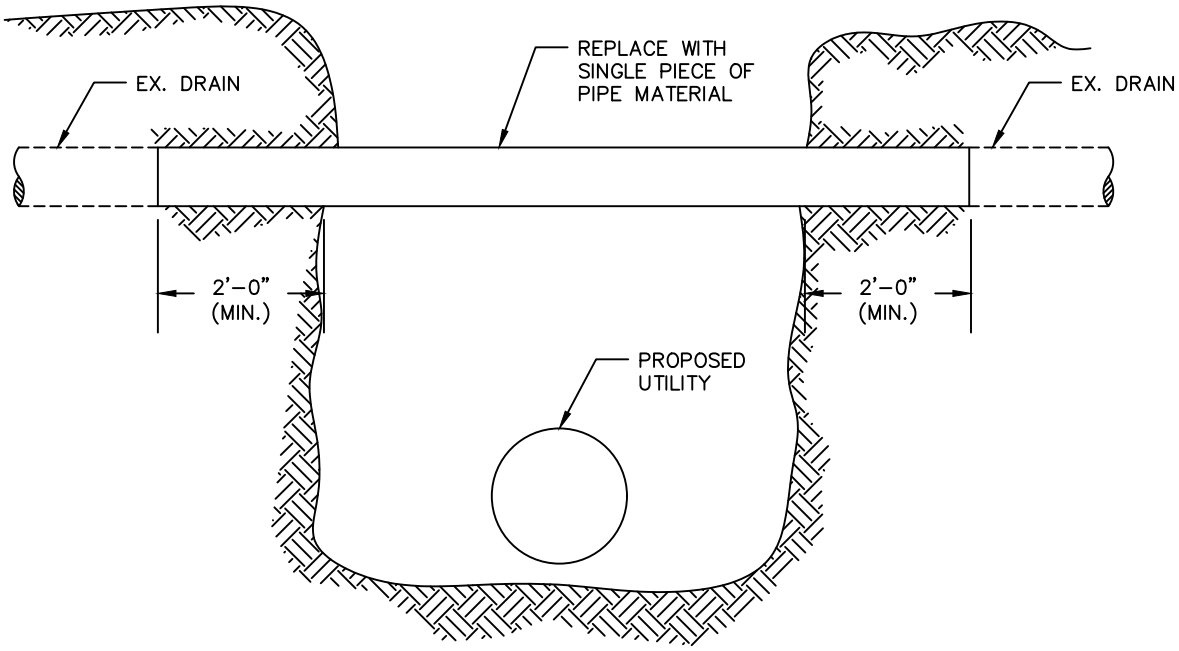

NOTES:

1. INSIDE DIAMETER OF REPLACEMENT PIPE SHALL BE EQUAL TO OR GREATER THAN INSIDE DIAMETER OF EXISTING TILE OR UNDERDRAIN.
2. REPLACEMENT MATERIAL USED SHALL BE EQUAL TO OR BETTER THAN THE EXISTING TILE OR UNDERDRAIN AS DIRECTED BY THE ENGINEER OR HIS REPRESENTATIVE.
3. PROVIDE FERNCO FITTINGS OR APPROVED EQUIVALENT WHERE EXISTING TILE OR UNDERDRAIN HAS WATERTIGHT JOINTS. PROVIDE 30# FELT OR CONCRETE MORTAR OVER THE UPPER HALF OF THE JOINT WHERE OPEN JOINTS ARE ENCOUNTERED.
4. BACKFILL BETWEEN THE PROPOSED UTILITY AND THE REPLACEMENT TILE OR UNDERDRAINSHALL BE GRANULAR AND COMPACTED TO COMPLETELY ELIMINATE SETTLEMENT.

DRAIN TILE & UNDERDRAIN REPLACEMENT	Village of Commercial Point
	STANDARD CONSTRUCTION DWG.
	REVISED: 05/14/18 — DRAWING NO. W-12

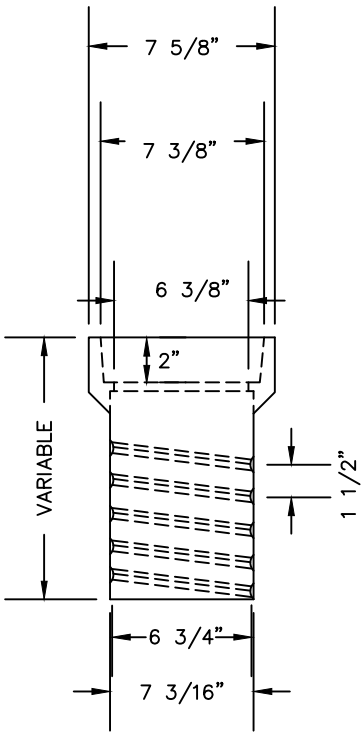

TOP

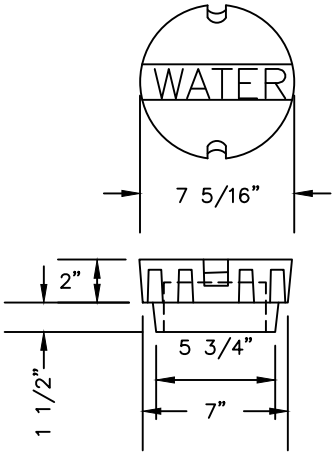

DROP LID

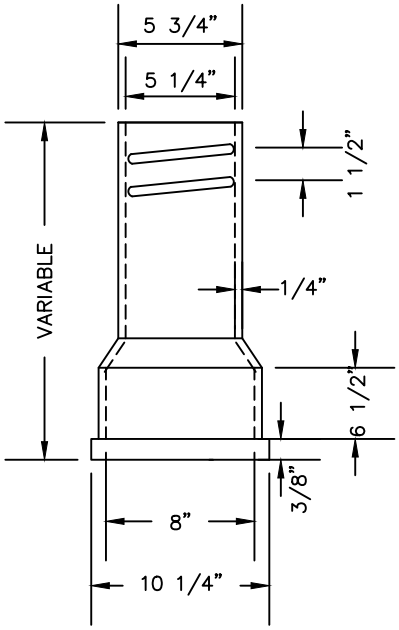

BOTTOM

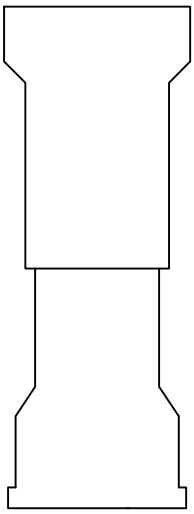

BOX COMPLETE

STANDARD VALVE BOX

Village of Commercial Point	
STANDARD CONSTRUCTION DWG.	
REVISED: 05/14/2018	DRAWING NO. W-14

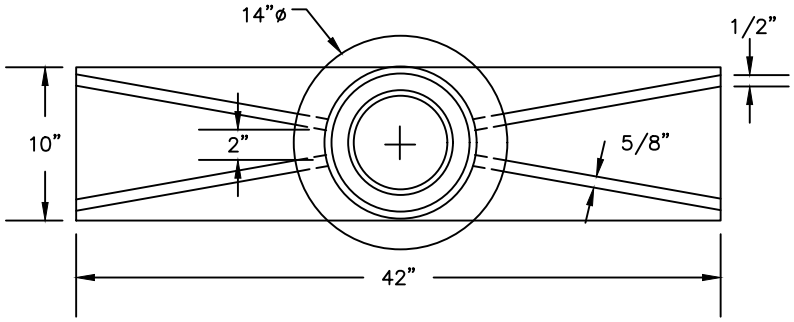

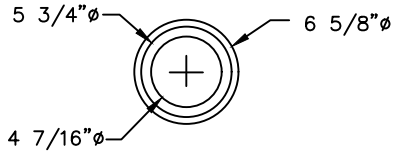

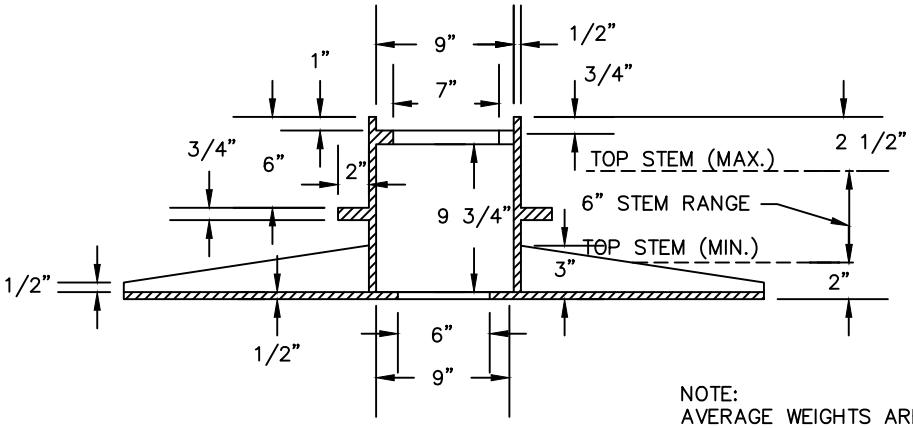

VALVE BOX

133 LBS.

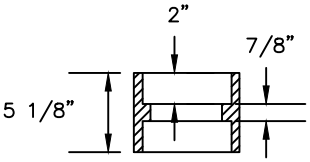

VALVE STEM SLEEVE

14 LBS.

NOTE:
AVERAGE WEIGHTS ARE TO THE NEAREST EVEN POUND
CALCULATED USING 0.26 LBS. PER CUBIC INCH.

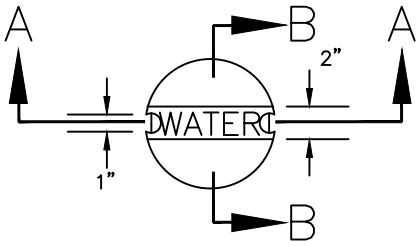

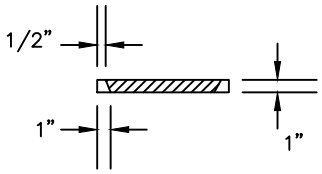

SECTION A-A

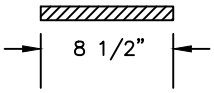

SECTION B-B

VALVE BOX LID

15 LBS.

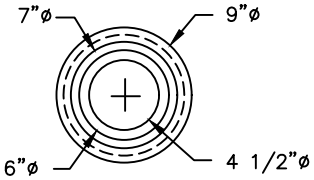

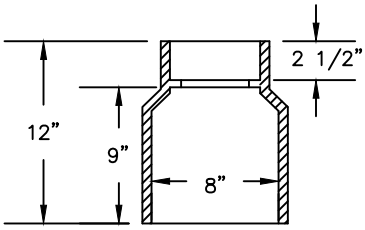

VALVE BOX BASE

41 LBS.

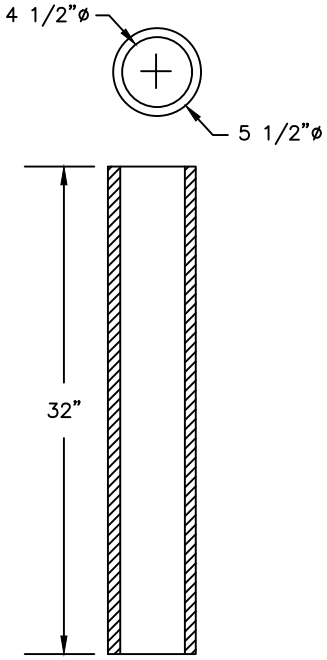

VALVE STEM

65 LBS.

TRAFFIC TYPE VALVE BOX	Village of Commercial Point
	STANDARD CONSTRUCTION DWG.
	REVISED: 05/14/2018 — DRAWING NO. W–15

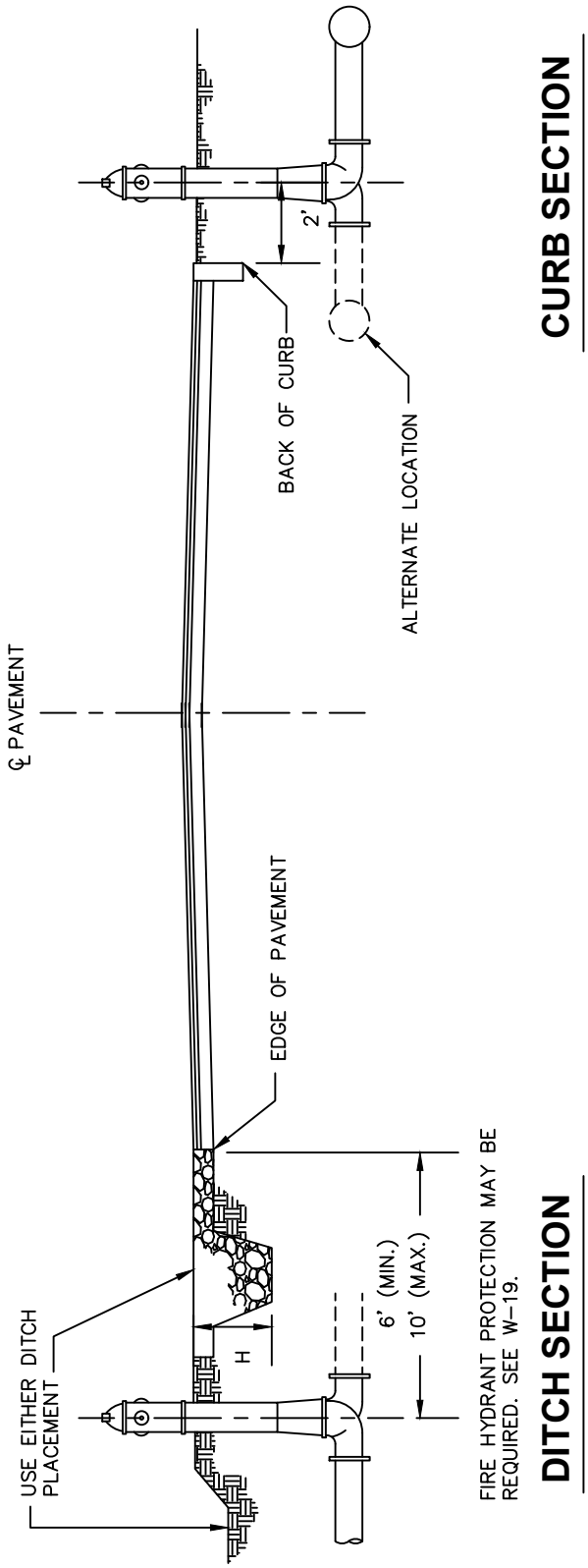

CURB SECTION

DITCH SECTION

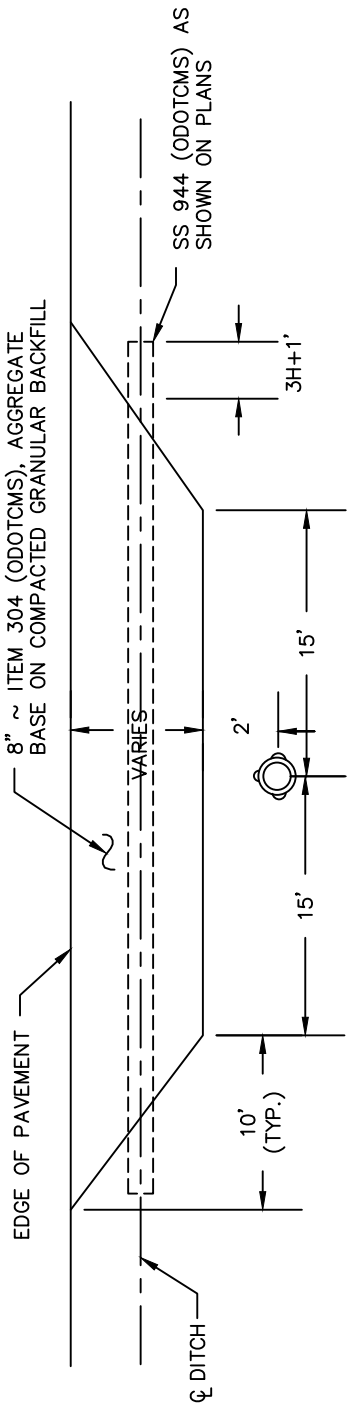

PLAN VIEW (DITCH SECTION)

NOTES:

1. THIS DETAIL IS TO BE USED IN CONJUCTION WITH THE FOLLOWING STANDARD DRAWINGS AS APPLICABLE: W–20 ~ STANDARD FIRE HYDRANT DETAIL, W–21 ~ TYPICAL HYDRANT SETTING (TYPE A), W–22 ~ TYPICAL HYDRANT SETTING (TYPE A MODIFIED) AND W–23 ~ TYPICAL HYDRANT SETTING (TYPE B & TYPE B MODIFIED).
2. NO FIRE HYDRANT SHALL BE LOCATED WITHIN SIX (6) FEET OF THE EDGE OF ANY RESIDENTIAL DRIVE APPROACH NOR SHALL ANY HYDRANT BE LOCATED WITHIN EIGHT (8) FEET OF ANY ALLEY, COMMERCIAL DRIVE OR ACCESS ROAD.

FIRE HYDRANT LOCATION DETAIL	Village of Commercial Point	
	STANDARD CONSTRUCTION DWG.	
	REVISED: 05/14/2018	DRAWING NO. W–18

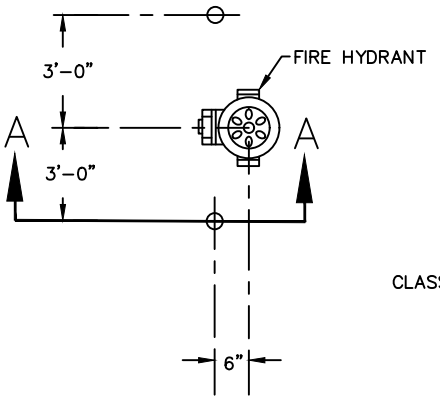

PLAN VIEW

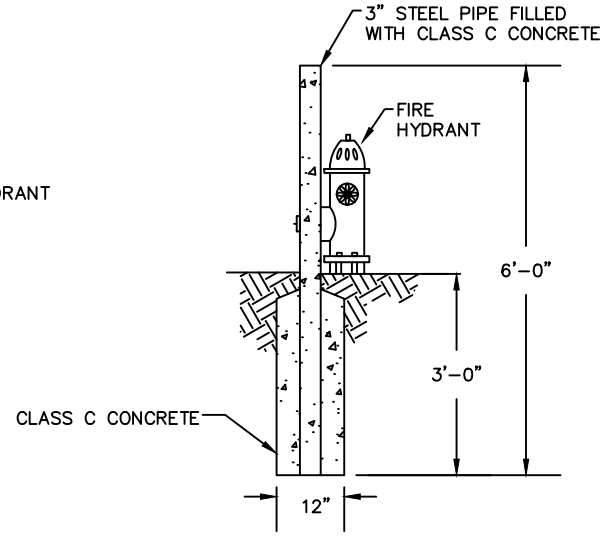

SECTION A-A

NOTES:

1. 3" STEEL PROTECTION POSTS SHALL BE WIRE-BRUSHED, CLEANED AND PAINTED WITH ONE COAT OF PRIMER AND TWO COATS OF FEDERAL SAFETY YELLOW ENAMEL, EACH COAT BEING THOROUGHLY DRY BEFORE THE NEXT COAT IS APPLIED.
2. FIRE HYDRANT PROTECTION SHALL BE REQUIRED AS SHOWN ON THE CONSTRUCTION DRAWINGS OR AS DIRECTED.

FIRE HYDRANT PROTECTION DETAIL	Village of Commercial Point	
	STANDARD CONSTRUCTION DWG.	
	REVISED: 05/14/2018	DRAWING NO. W-19

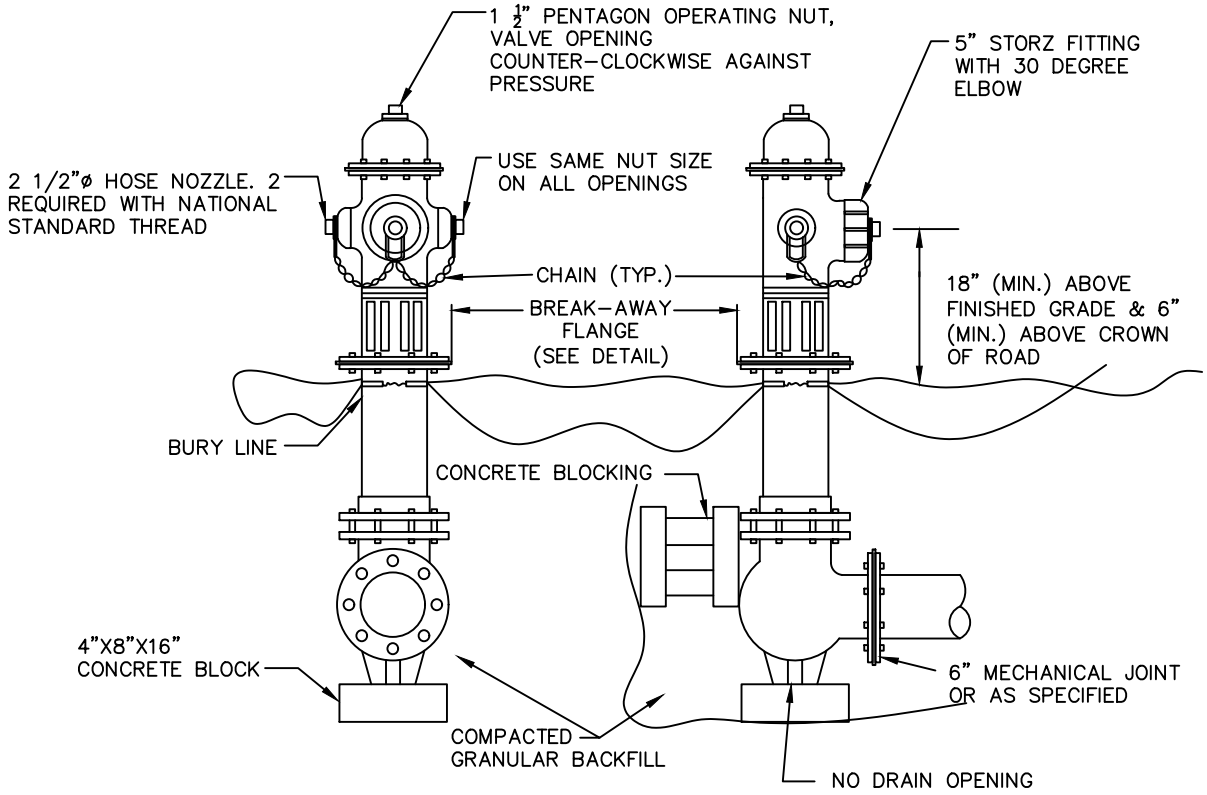

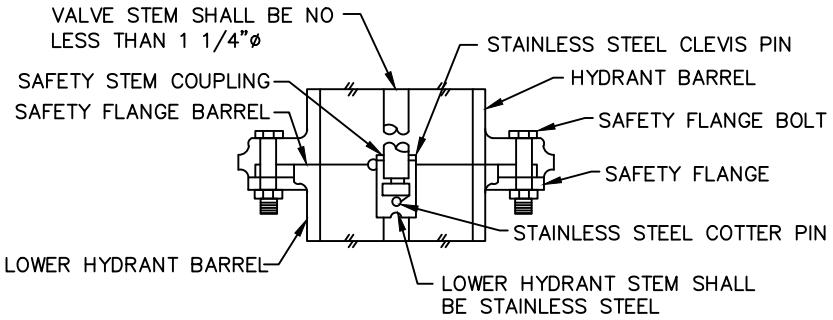

BREAK-AWAY FLANGE & SAFETY COUPLING SECTION

NOTES:

1. BACKFILL SHALL BE GRANULAR MATERIAL CONFORMING TO ITEM 310, GRADE A (ODOTCMS), OR APPROVED SUITABLE EXCAVATED MATERIAL POWER TAMPED IN LAYERS NOT EXCEEDING 4" IN THICKNESS, LOOSE MEASUREMENT. BACKFILL SHALL EXTEND FROM THE BOTTOM OF THE PIT OR TRENCH TO 6" BELOW THE EXISTING OR PROPOSED SURFACE. COST OF FURNISHING AND PLACING BACKFILL SHALL BE INCLUDED IN THE PRICE BID FOR EACH FIRE HYDRANT.
2. ALL FIRE HYDRANTS SHALL BE INSTALLED WITH CONCRETE BLOCKING AGAINST UNDISTURBED EARTH.
3. ALL FIRE HYDRANTS SHALL HAVE STAINLESS STEEL BOLTS BELOW GROUND.

STANDARD FIRE HYDRANT DETAIL

Village of Commercial Point	
STANDARD CONSTRUCTION DWG.	
REVISED: 05/14/2018	DRAWING NO. W-20

FIRE HYDRANT NOTES:

TYPE OF HYDRANT: THE HYDRANT SHALL BE THE POST TYPE TRAFFIC MODEL MADE OF CAST IRON AS SHOWN HERON. IT SHALL HAVE A BREAKING CONNECTION THAT PREVENTS LOSS OF WATER WHEN THE UPPER AND LOWER SECTIONS ARE SEPARATED BY A SMASHING IMPACT. THE HYDRANT SHALL BE OF THE COMPRESSION TYPE WITH THE VALVE OPENING IN A COUNTERCLOCKWISE DIRECTION AGAINST THE PRESSURE AND CLOSING WITH THE PRESSURE. THE VALVE END OF THE STEM OR VALVEROD SHALL BE SO CONSTRUCTED AS TO ELIMINATE CONTACT OF DISSIMILAR METALS IN THE PRESENCE OF MOISTURE.

THE STEM OR VALVE ROD BETWEEN THE VALVE AND OPERATING NUT SHALL BE CONSTRUCTED IN ONE CONTINUOUS LENGTH FROM THE VALVE TO THE BREAKING COUPLING OR TO THE BOTTOM OF THE EXTENSION PIECE WHERE EXTENSIONS ARE REQUIRED. THE BREAKING COUPLING SHALL FIT OVER THE VALVE ROD AND BE LOCATED AT THE PROPER POINT TO CONFORM TO THE BREAKING CONNECTION IN THE STANDPIPE. THE LOWER STEM SHALL BE 304 STAINLESS STEEL.

THE BARREL SHALL HAVE AN AREA OF NOT LESS THAN 120 PERCENT OF THE VALVE OPENING. THE TYPE OF VALVE SEAL SHALL BE RUBBER WITH THE DIAMETER OF THE PORT IN THE SEAL RING BEING A MINIMUM OF 4 1/4".

ALL INTERIOR WORKING PARTS OF THE HYDRANT INCLUDING THE VALVE AND VALVE SEAT SHALL BE SUCH THAT THEY CAN BE REMOVED THROUGH THE TOP OF THE STANDPIPE WITHOUT EXCAVATION. THE UPPER SECTION OF THE STANDPIPE ABOVE THE GROUND LINE SHALL BE ADJUSTABLE SO THAT THE NOZZLES CAN BE ROTATED TO ANY DESIRED POSITION. ALL DRIP OR DRAIN OPENINGS SHALL BE PLUGGED.

REFERENCE SPECIFICATIONS: ALL FIRE HYDRANTS SHALL CONFORM TO THE LATEST AMERICAN WATER WORKS ASSOCIATION SPECIFICATIONS 0502, THE REQUIREMENTS OF THE OWNER AND APPLICABLE LOCAL FIRE DEPARTMENT. ALL SPECIFICATIONS SHALL BE THE LATEST EDITION IN EFFECT ON THE DATE THE CONSTRUCTION DRAWINGS ARE APPROVED (SIGNED) BY THE OWNER, UNLESS OTHERWISE NOTED.

APPROVALS AND CERTIFICATION: THE SUPPLIER OR MANUFACTURER SHALL SUBMIT TO THE OWNER SIX (6) COPIES OF THE RESULTS OF CERTIFIED FLOW TESTS RUN BY AN INDEPENDENT TESTING LABORATORY AND SHOP DRAWINGS WITH DIMENSIONS, MATERIALS AND NOMENCLATURE OF PARTS FOR EACH TYPE OR MODEL OF HYDRANT PROPOSED FOR USE IN THE PROJECT AREA.

UPON APPROVAL OF THE ABOVE INFORMATION BY THE OWNER, IT SHALL REMAIN ON FILE WITH THE OWNER. SUBMISSION OF THE ABOVE MATERIALS WITH EACH ORDER OF FIRE HYDRANTS IS NOT NECESSARY IF APPROVED MATERIAL IS ALREADY ON FILE. SUBMISSION OF NEW MATERIAL IS REQUIRED WHEN A DEVIATION IN THE PRODUCT, ITS MANUFACTURER, OR THE STANDARDS IS REQUESTED.

ANY FIRE HYDRANTS DELIVERED TO A PROJECT WHICH FAIL TO CONFORM TO THE APPROVED INFORMATION ON FILE WITH THE OWNER SHALL BE REJECTED.

WITH EACH DELIVERY SHIPMENT OF FIRE HYDRANTS, THE HYDRANT MANUFACTURER SHALL CERTIFY THAT THE HYDRANTS CONFORM TO THE INFORMATION APPROVED AND ON FILE WITH THE OWNER. THIS CERTIFICATE SHALL INCLUDE THE MODEL OR IDENTIFICATION NUMBERS OF THE HYDRANTS BEING DELIVERED AND THE APPROVAL DATE OF THE INFORMATION ON FILE WITH THE OWNER. THIS DOCUMENTATION DOES NOT CONSTITUTE APPROVAL OF FINAL ACCEPTANCE OF THE SPECIFIC HYDRANTS DELIVERED.

STANDARD FIRE HYDRANT DETAIL

VILLAGE OF
Commercial Point

STANDARD
CONSTRUCTION DWG.

REVISED:	DRAWING NO.
05/14/2018	W-20

FIRE HYDRANT NOTES: (CONTINUED)

INSPECTION: PRIOR TO INSTALLATION, ALL FIRE HYDRANTS SHALL BE INSPECTED BY THE OWNER AND BY THE CHIEF OF THE APPLICABLE FIRE DEPARTMENT OR HIS REPRESENTATIVE. THE HYDRANTS SHALL RECEIVE EITHER A CONDITIONAL ACCEPTANCE OR A REJECTION. CONDITIONAL ACCEPTANCE SHALL MEAN THAT THE HYDRANTS MAY BE INSTALLED.

UPON INSTALLATION, EACH HYDRANT SHALL BE TESTED FOR OPERATION, LEAKS AND FLOW WITH A MEMBER OF THE CPWTP DURING THE TEST AND SHALL RECIEVE EITHER OPERATIONAL ACCEPTACE OR A REJECTION.

THE OWNER RESERVES THE RIGHT TO REJECT ANY AND ALL FIRE HYDRANTS FOUND TO BE IN NON-COMPLIANCE WITH ANY OF THE REQUIREMENTS STATED HEIRIN AT ANYTIME DURING THE ACCEPTANCE OR ABOVE DESCRIBED APPROVAL PROCESS. ANY HYDRANTS WHICH ARE REJECTED AND WHICH CANNOT BE BROUGHT INTO COMPLIANCE WITH THE REQUIREMENTS AS STATED HERIN SHALL BE REMOVED FROM THE PROJECT SITE, STORAGE SITE OR THE WORK SITE AT NO EXPENSE TO THE OWNER.

THE FINAL FIELD ACCEPTANCE SHALL GOVERN OVER ANY DOCUMENT APPROVAL AND SHALL BE BASED ON ALL WORK BEING COMPLETED INCLUDING INSTALLATION, TESTING, OPERATION AND PAINTING.

INSTALLATION: THE FIRE HYDRANTS SHALL BE INSTALLED AS SPECIFIED HEREIN AND IN ACCORDANCE WITH THE FOLLOWING STANDARD DRAWINGS: W-18 ~ FIRE HYDRANT LOCATION DETAIL, W-19 ~ FIRE HYDRANT PROTECTION DETAIL, W-21 -TYPICAL HYDRANT SETTING (TYPE A), W-22 ~ TYPICAL HYDRANT SETTING (TYPE A MODIFIED), AND W-23 ~ TYPICAL HYDRANT SETTING (TYPE B AND TYPE B MODIFIED).

THE BASE SECTION OF ALL FIRE HYDRANTS SHALL BE SET TO AN ELEVATION WHICH WILL BE CORRECT FOR THE PROPOSED GRADE OF THE STREET. THE ELEVATION OF THE TOP BARREL SECTION SHALL BE SET SO THAT THE GRADE LINE OF THE HYDRANT IS AT THE ESTABLISHED OR PROPOSED FINISHED GRADE AS INDICATED ON THE CONSTRUCTION DRAWINGS, THROUGH THE INSTALLATION OF HYDRANT EXTENSION SECTIONS AS NEEDED.

PRIOR TO OPERATIONAL ACCEPTANCE, THE HYDRANT NOZZLES SHALL BE TURNED AWAY FROM THE STREET AND BAGGED. UPON RECIEVING OPERATIONAL ACCEPTANCE, THE HYDRANT SHALL BE TURNED WITH THE STEAMER NOZZLE FACING THE ROAD OR STREET AND THE HYDRANT EXERCISED TO CHECK THE OPERATION AND FOR LEAKS.

PAINTING: FINAL PAINT COLOR SHALL BE GRENDIER RED ENAMEL. PRIOR TO PAINTING, SAMPLES SHALL BE SUBMITTED TO THE OWNER FOR APPROVAL. AFTER OPERATIONAL ACCEPTANCE, ALL HYDRANT SURFACES ABOVE THE GROUND LINE SHALL BE CLEANED, WASHED AND WIRE BRUSHED. ALL SURFACES OR SPOTS THAT REQUIRE TOUCHING UP SHALL HAVE ONE (1) COAT OF UNIVERSAL METALLIC PRIMER. WHEN ALL THE SURFACES HAVE BEEN PRIMED AND ARE DRY, ALL HYDRANT SURFACES SHALL RECEIVE TWO (2) COATS OF THE APPROVED ENAMEL.

MATERIALS AND WORKMANSHIP: ALL MACHINED PARTS SHALL BE TRUE TO GUAGE SO THAT THEY WILL BE INTERCHANGEABLE BETWEEN HYDRANTS OF THE SAME MAKE AND SIZE. ALSO REQUIRED, NON-ADJUSTABLE HYDRANT WRENCHES, PROPERLY SIZED TO THE SPECIFIED OPERATING NUT DIMENSIONS AND FABRICATED BY THE HYDRANT MANUFACTURER SHALL BE SUPPLIED.

STANDARD FIRE HYDRANT DETAIL

Village of Commercial Point

STANDARD CONSTRUCTION DWG.

REVISED:	DRAWING NO.
05/14/2018	W-20

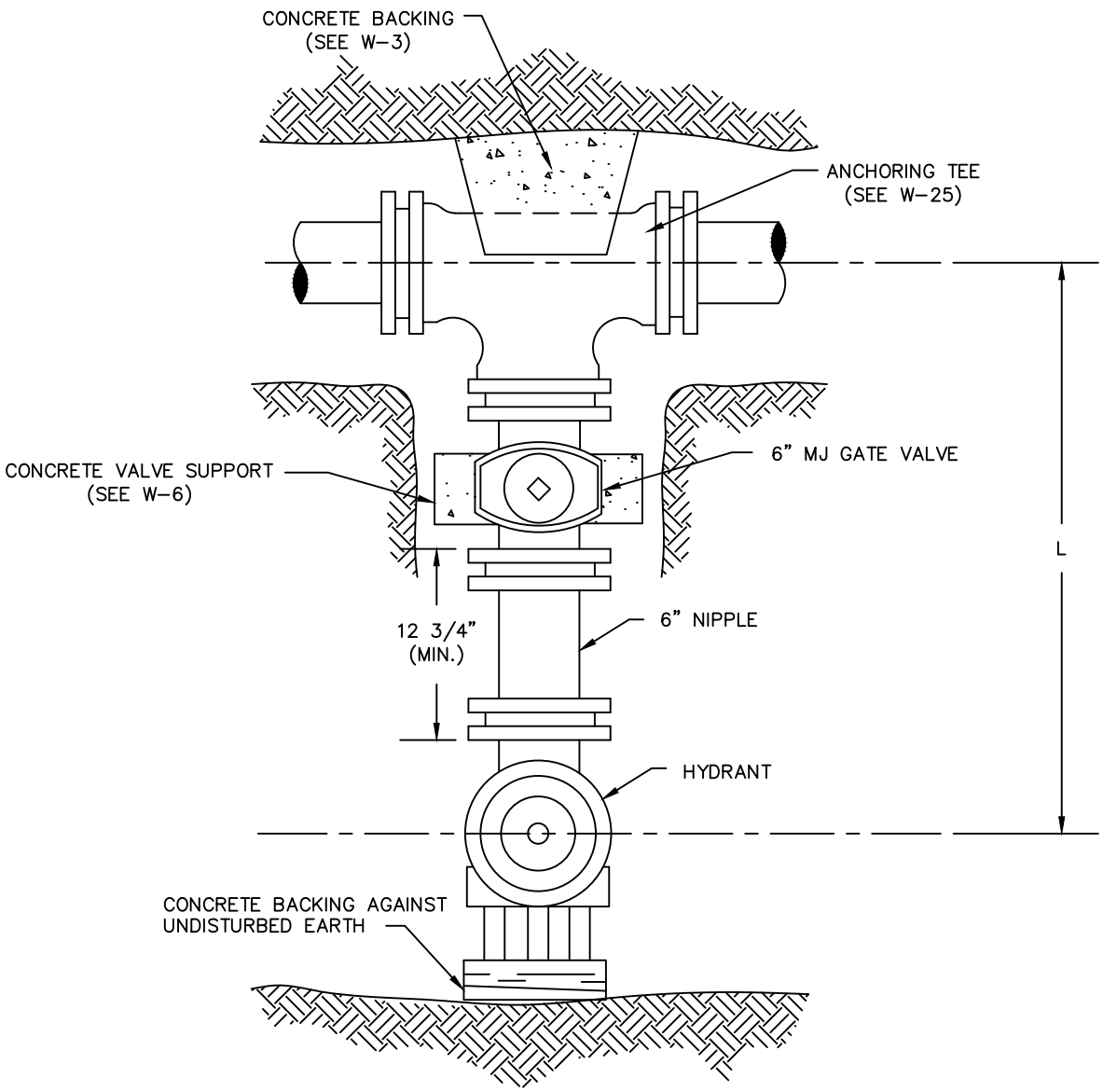

MAIN LINE	MINIMUM L
6"	35"
8"	36"
12"	39"
16"	42"

TYPICAL HYDRANT SETTING (TYPE "A")

Village of Commercial Point

STANDARD CONSTRUCTION DWG.

REVISED: 05/14/2018

DRAWING NO. W-21

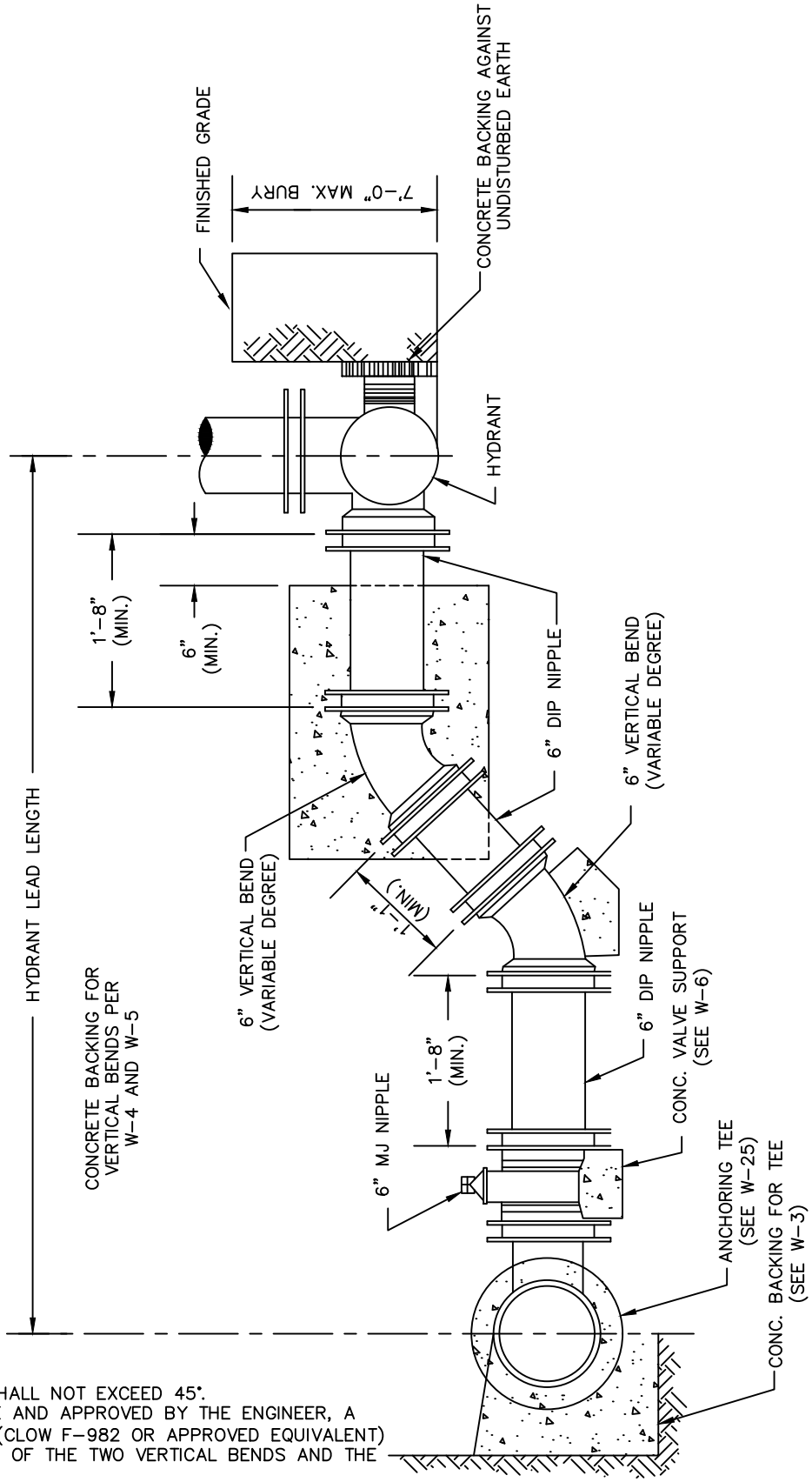

MINIMUM HYDRANT LEAD LENGTH			
SIZE OF MAIN	VERTICAL BENDS		
	11-1/4"	22-1/2"	45°
6"	8'-3"	8'-1"	7'-8"
8"	8'-2"	8'-2"	7'-9"
12"	8'-6"	8'-5"	8'-0"
16"	8'-9"	8'-8"	8'-3"

NOTES:

1. VERTICAL BENDS SHALL NOT EXCEED 45°.
2. WHERE APPLICABLE AND APPROVED BY THE ENGINEER, A COMMERCIAL OFFSET (CLOW F-982 OR APPROVED EQUIVALENT) MAY BE USED IN LIEU OF THE TWO VERTICAL BENDS AND THE INCLINED NIPPLE.
3. CONCRETE BACKING FOR VERTICAL BENDS SHALL BE PROVIDED PER W-4 AND W-5.

TYPICAL HYDRANT SETTING (TYPE "A" MODIFIED)

Village of Commercial Point

STANDARD CONSTRUCTION DWG.

REVISED: 05/14/2018

DRAWING NO. W-22

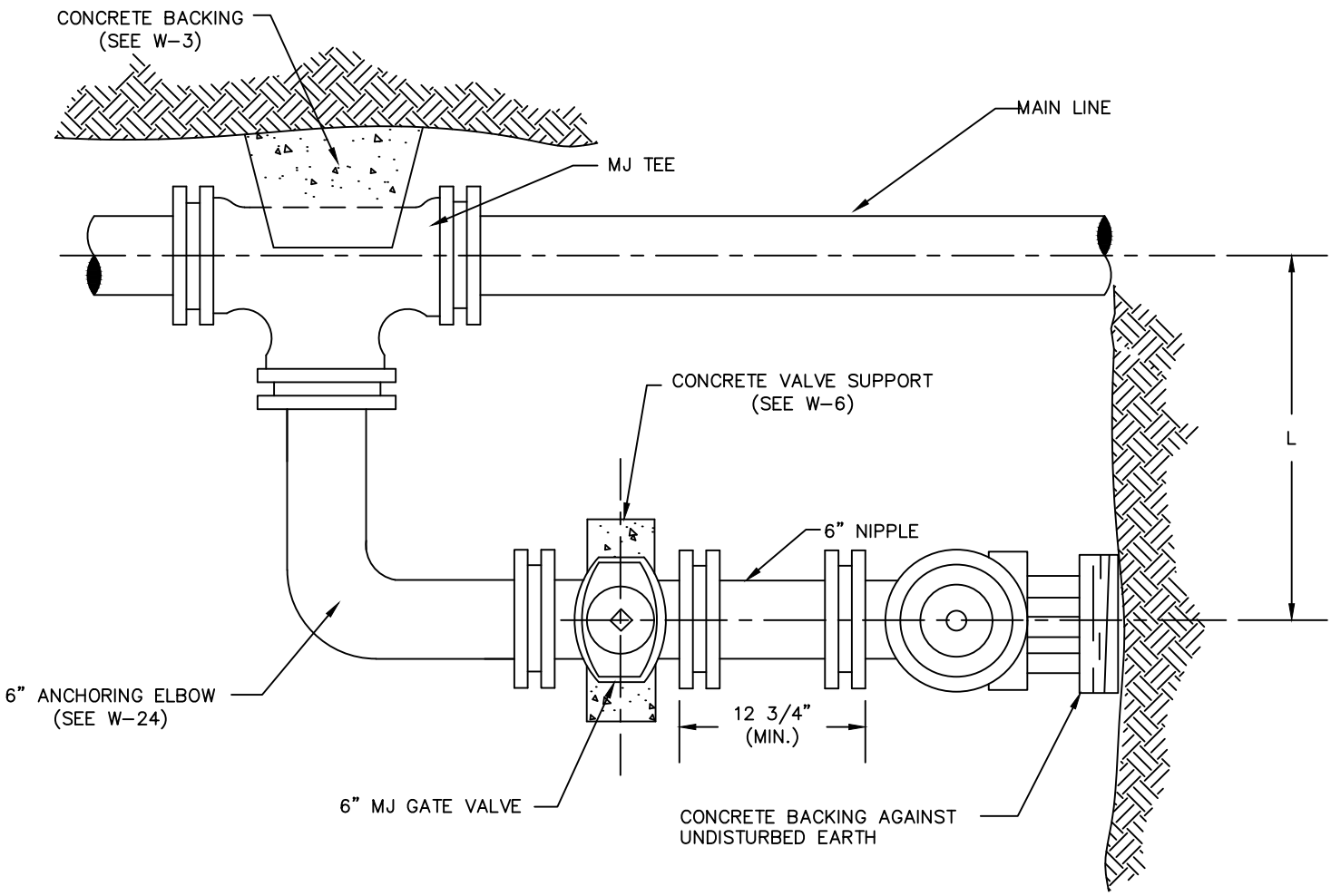

MAIN LINE	MINIMUM L	
	TYPE B	TYPE B MODIFIED
6"	24"	19"
8"	25"	20"
12"	28"	23"
16"	31"	26"

NOTES:

1. TYPE B: LONG SIDE OF BEND TO TEE
TYPE B MODIFIED: SHORT SIDE OF BEND TO TEE.
2. FIRE HYDRANTS SHALL HAVE A MAXIMUM BURY OF 7'-0". MODIFICATION OF THE HYDRANT LEAD TO MEET THIS REQUIREMENT SHALL BE IN THE SECITION FROM THE VALVE TO THE HYDRANT PER W-22.

TYPICAL HYDRANT SETTING (TYPES "B" & B MODIFIED)

Village of Commercial Point

STANDARD CONSTRUCTION DWG.

REVISED: 05/14/2018

DRAWING NO. W-23

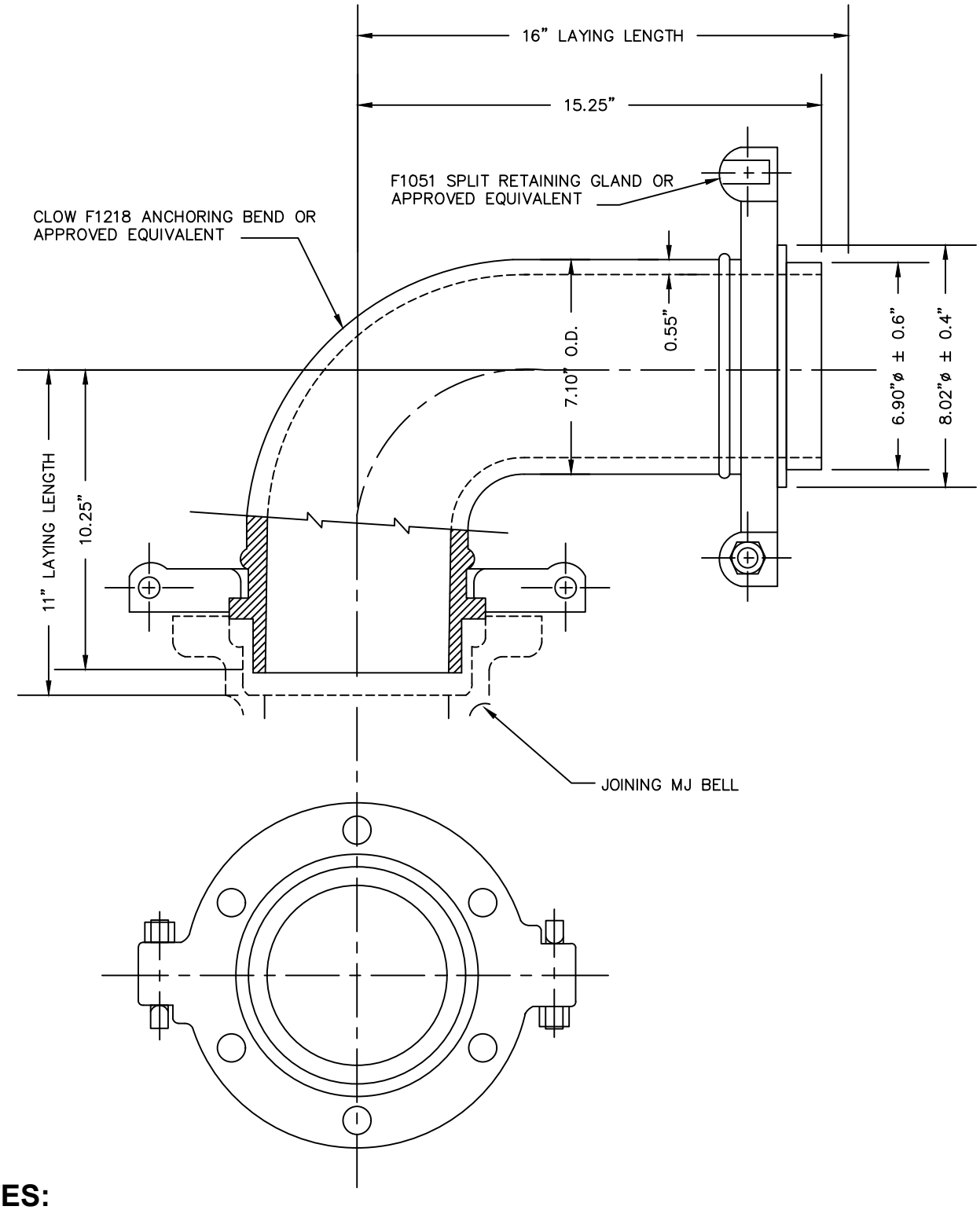

NOTES:

1. THIS BEND IS TO BE USED WITH TYPE B AND B MODIFIED FIRE HYDRANT INSTALLATIONS. SEE W-23.

6" ~ 90° HYDRANT BEND

Village of Commercial Point	
STANDARD CONSTRUCTION DWG.	
REVISED: 05/14/2018	DRAWING NO. W-24

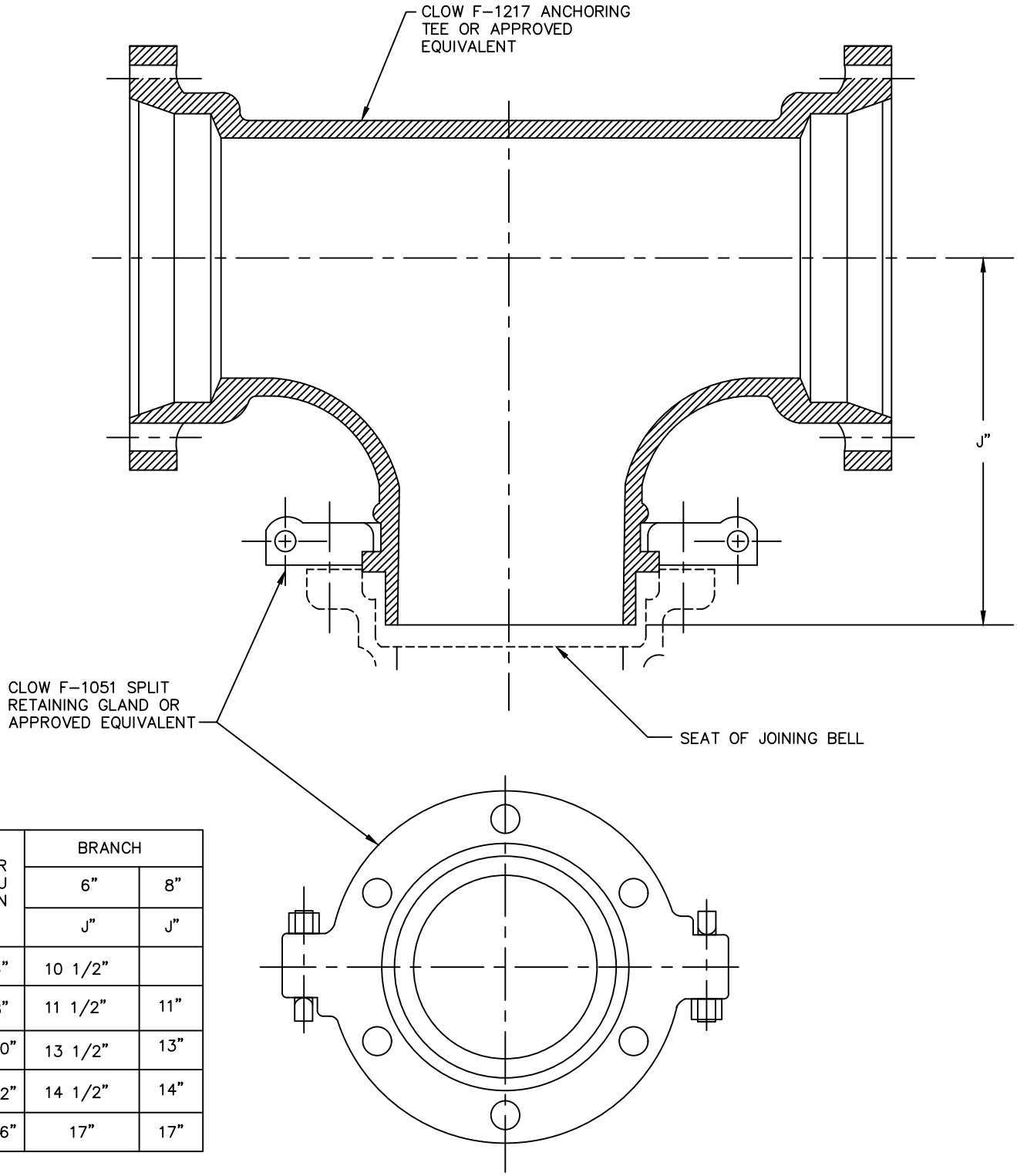

RUN	BRANCH	
	6"	8"
	J"	J"
6"	10 1/2"	
8"	11 1/2"	11"
10"	13 1/2"	13"
12"	14 1/2"	14"
16"	17"	17"

ANCHORING TEE

Village of Commercial Point

STANDARD CONSTRUCTION DWG.

REVISED: 05/14/2018

DRAWING NO. W-25

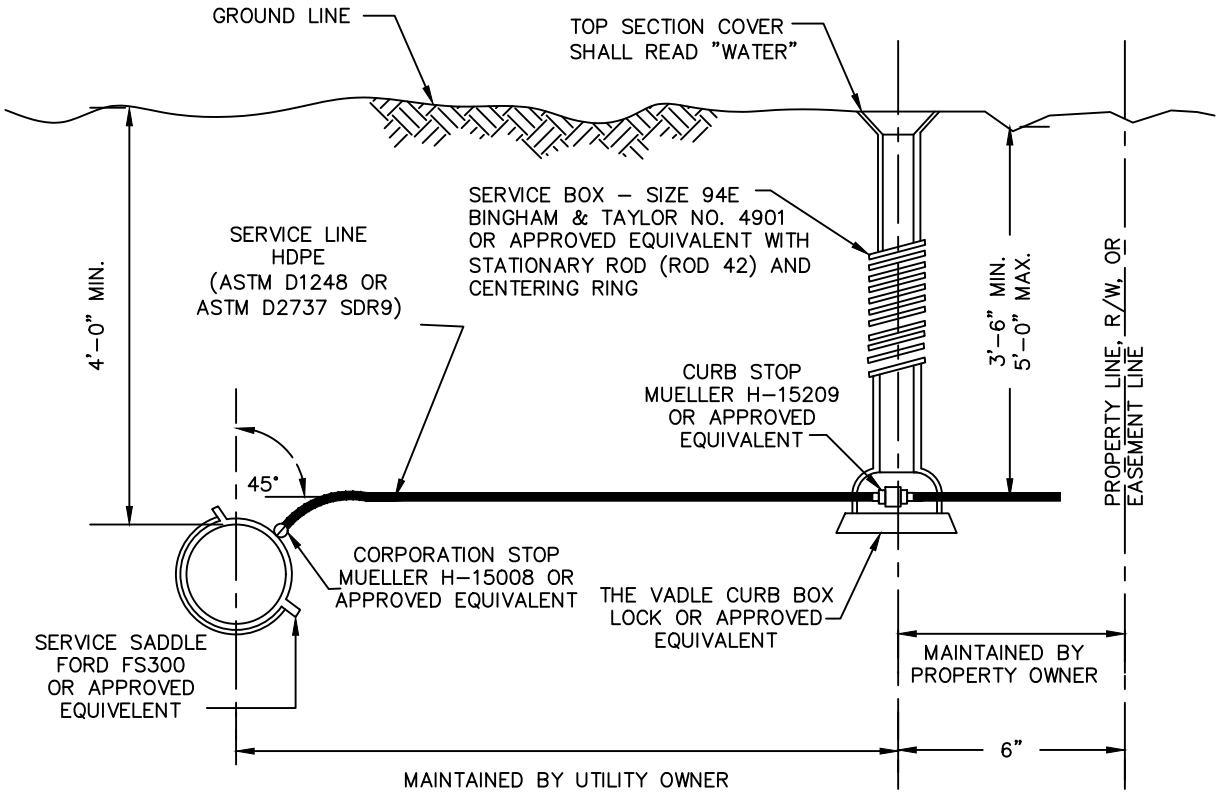

NOTES:

1. THE WATER SERVICE LINE SHALL BE A SINGLE PIECE OF PIPE WITHOUT JOINTS, COUPLINGS OR UNIONS BETWEEN:
   (a) THE CORPORATION STOP AND THE CURB STOP
   (b) THE CURB STOP AND THE METER SETTING.
2. THE WATER SERVICE LINE SHALL BE BEDDED USING TYPE 'A' BACKFILL.
3. AT THE TIME BUILDING CONSTRUCTION, SITE GRADING AND LANDSCAPING IS COMPLETED, THE VALVE BOX OVER THE CURB BOX SHALL:
   (a) BE SET VERTICALLY OVER THE CURB STOP SO THAT A KEY CAN BE PLACED ON THE CURB STOP AND THE CURB STOP EASILY OPERATES TO THE FULLY OPEN AND CLOSED POSITIONS
   (b) HAVE THE TOP SET AT FINISHED GRADE
   (c) BE UNBROKEN
4. ALL NEW WATER SERVICE INSTALLATIONS AND ALL REPAIRED OR REPLACED WATER SERVICE INSTALLATIONS SHALL BE INSPECTED PRIOR TO ACCEPTANCE OR TRANSFER OF OWNERSHIP. FAILURE TO REQUEST AN INSPECTION OR TO CORRECT THE NOTED DEFICIENCIES PRIOR TO OCCUPYING A BUILDING OR CHANGING OWNERSHIP MAY CAUSE THE SERVICE TO BE DISCONTINUED. THE SERVICE LINE TO BE DISCONNECTED FROM THE WATER SYSTEM, AND/OR PENALTIES TO BE IMPOSED, ALL AS PROVIDED IN THE CURRENT WATER REGULATIONS.
5. NO TAP SHALL BE MADE INTO ANY WATER LINE UNTIL ALL PERMITS HAVE BEEN OBTAINED. ALL LEGAL FEES PAID, AND THE PROPER DEPARTMENT NITIFIED 2 DAYS PRIOR TO BEGINNING WORK.

STANDARD WATER SERVICE

Village of Commercial Point	
STANDARD CONSTRUCTION DWG.	
REVISED: 05/14/2018	DRAWING NO. W–30

Centering Ring

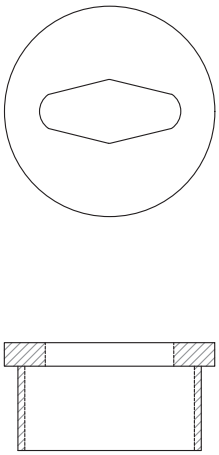

Stationary Rod

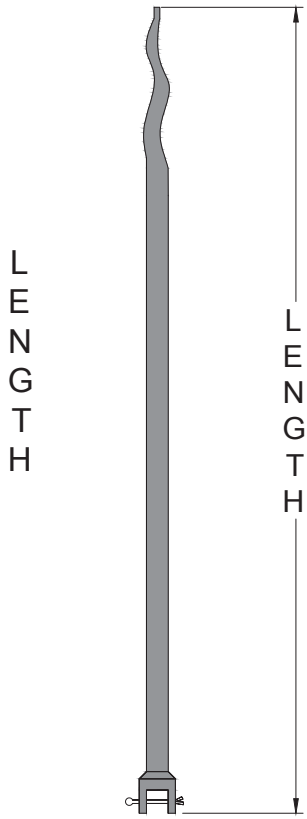

Centering Ring

Stationary Rods, Stainless Steel

NOTES:

1.ALL STATIONARY RODS AND PINS MUST BE MADE OF STAINLESS STEEL
2. STATIONARY RODS MUST BE GENERAL FOUNDRIES 49S36 OR APPROVED EQUIVALENT
3. ALL CENTERING RINGS MUST BE GENERAL FOUNDRIES 49000 OR APPROVED EQUIVALENT
4. TOP OF STATIONARY ROD MUST BE WITHIN 8' OF CURB BOX LID.

STANDARD WATER SERVICE

Village of Commercial Point	
STANDARD CONSTRUCTION DWG.	
REVISED: 05/14/2018	DRAWING NO. W-30

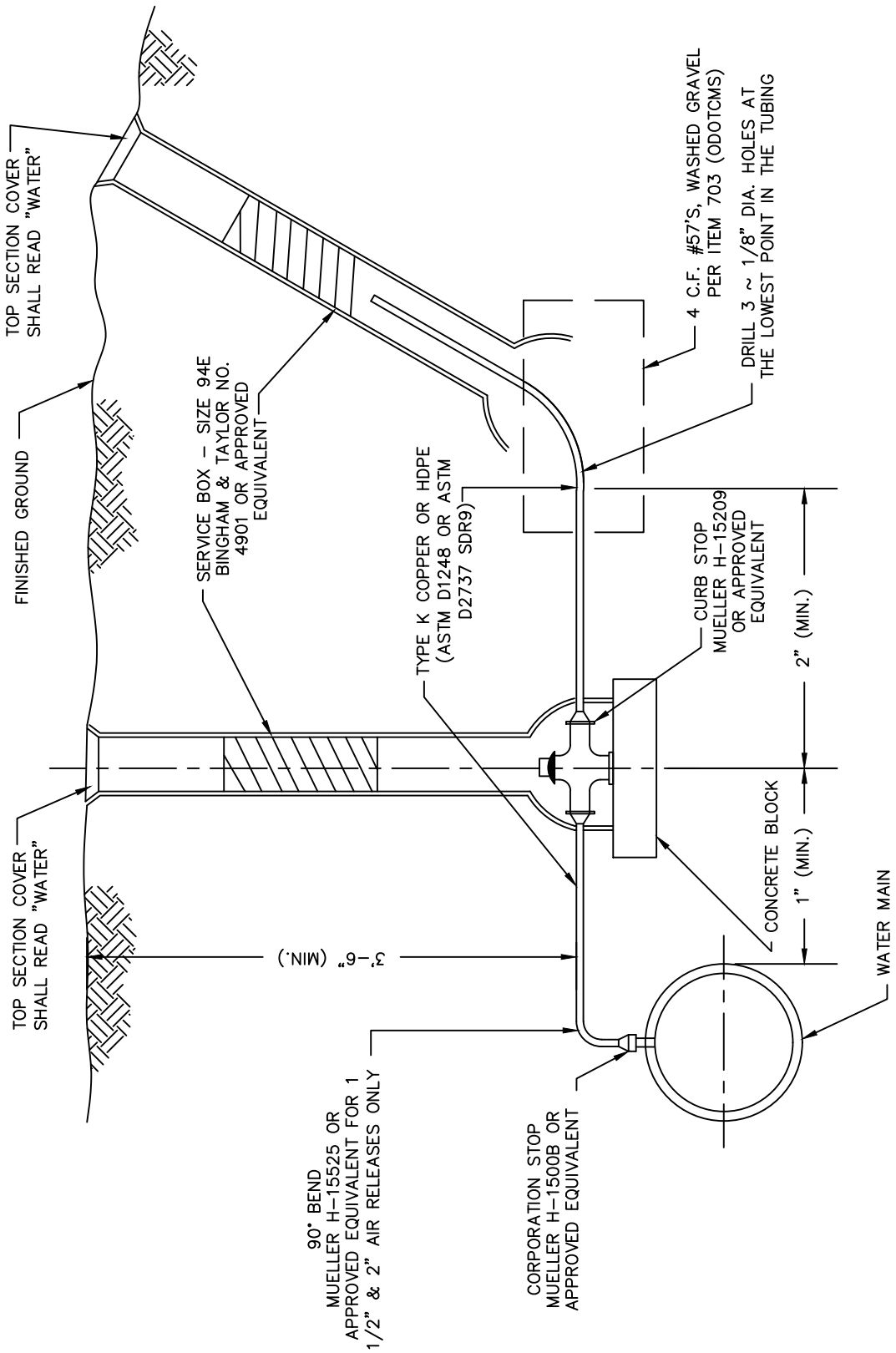

TYPICAL AIR RELEASE
3/4" THRU 2"

JEFFERSON WATER & SEWER DISTRICT	
STANDARD CONSTRUCTION DWG.	
REVISED: 02/15/07	DRAWING NO. W-31

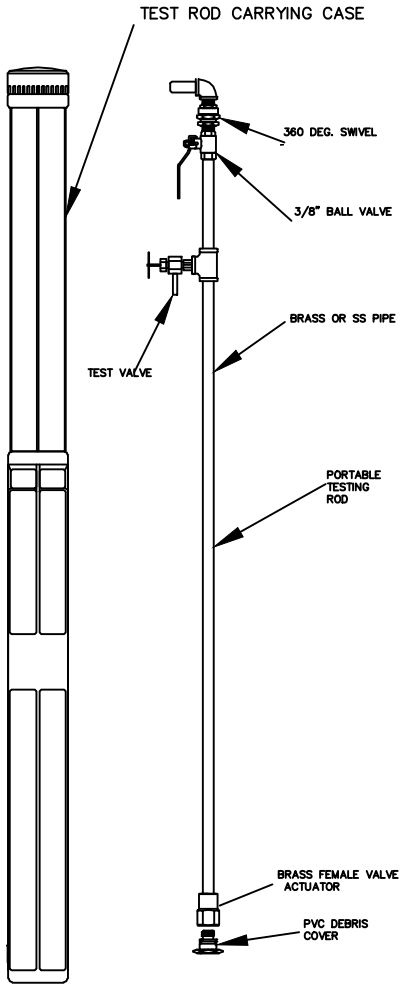

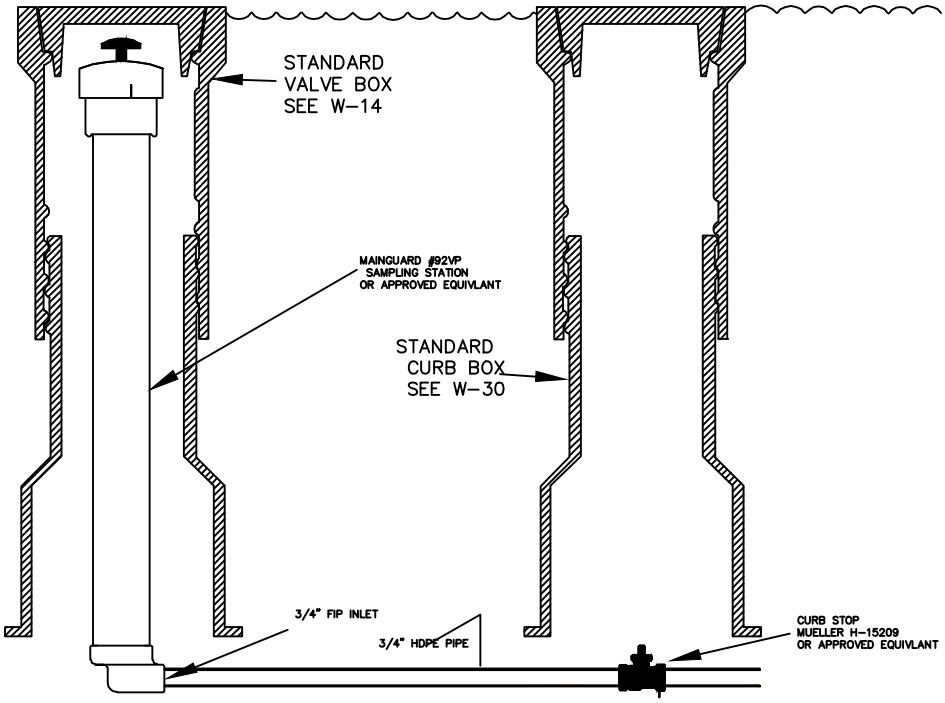

Notes

1. SAMPLING STATIONS SHALL BE 42" BURY WITH A $\frac{3}{4}$" FIP INLET.
2. ALL STATIONS SHALL BE INSTALLED WITH A STANDARD 5-1/4' CAST IRON VALVE BOX.
3. THE STATION SHALL REQUIRE NO KEY FOR OPERATION, AND THE WATER WILL FLOW IN AN ALL BRASS WATER WAY.
4. ALL WORKING PARTS SHALL BE OF BRASS AND BE REMOVABLE FROM ABOVE GROUND WITH NO DIGGING.
5. EXTERIOR PIPE SHALL BE GALVANIZED STEEL.
6. PORTABLE ROD WILL BE ALL BRASS OR STAINLESS STEEL, AND FURNISHED WITH A PROTECTIVE PLUG AND CARRYING CASE.
7. ONE ROD WILL BE FURNISHED WITH EVERY 5 STATIONS.
8. STATIONS SHALL BE KUPFERIE FOUNDRY #92-VB OR APPROVED EQUIVLANT.

TYPICAL POTABLE WATER SAMPLING STATION

Village of Commercial Point	
STANDARD CONSTRUCTION DWG.	
REVISED: 05/14/2018	DRAWING NO. W-32

*DIAMETER = SIZE OF METER OR SERVICE LINE; NOT TO BE INSTALLED W/DETECTOR CHECK OR SERVICES LESS THAN 2"

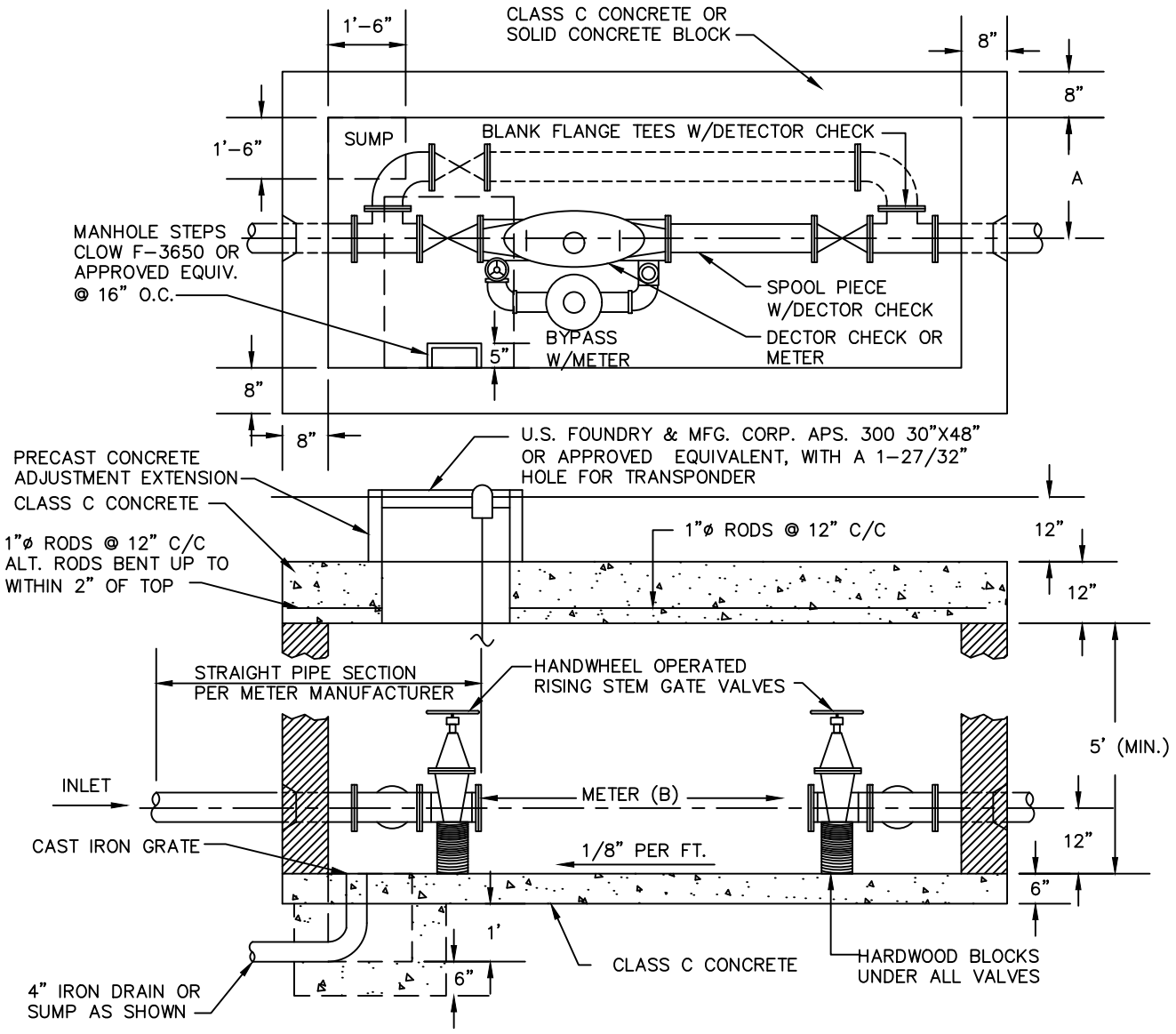

METER PITS WITH SUMPS SHALL BE EQUIPPED WITH SUMP PUMPS. ALL METER PITS SHALL HAVE A WEATHERPROOF 110V, 20 AMP OUTLET ADJACENT TO THE PIT.

SIZE			INSIDE VAULT DIMENSIONS		METER LENGTH				A	B
METER	FM-CT BYPASS	DETECTOR BYPASS	LENGTH	WIDTH	FM-CT	DETECTOR	COMPOUND	DISC		
1 1/2"			6'-0"	4'-0"				12 5/8"	1'-6"	
2"			7'-0"	4'-0"			1'-5"		1'-6"	1'-5"
3"			8'-0"	4'-0"			2'-0"		1'-6"	2'-0"
4"	2"	1"	8'-0"	5'-0"	2'-9"	1'-4 1/2"	2'-5"		2'-0"	2'-9"
6"	3"	1 1/2"	10'-0"	6'-3"	3'-9"	1'-10 1/2"			2'-8"	3'-9"
8"	4"	2"	11'-0"	7'-3"	4'-5"	2'-2 1/2"			3'-0"	5'-8"
10"	6"	2"	14'-6"	8'-0"	5'-8"	3'-0"			3'-0"	5'-8"
10X12	8"		14'-6"	8'-0"	5'-8"				3'-0"	5'-8"

STANDARD METER PIT

Village of Commercial Point

STANDARD CONSTRUCTION DWG.

REVISED: 05/14/2018

DRAWING NO. W-35

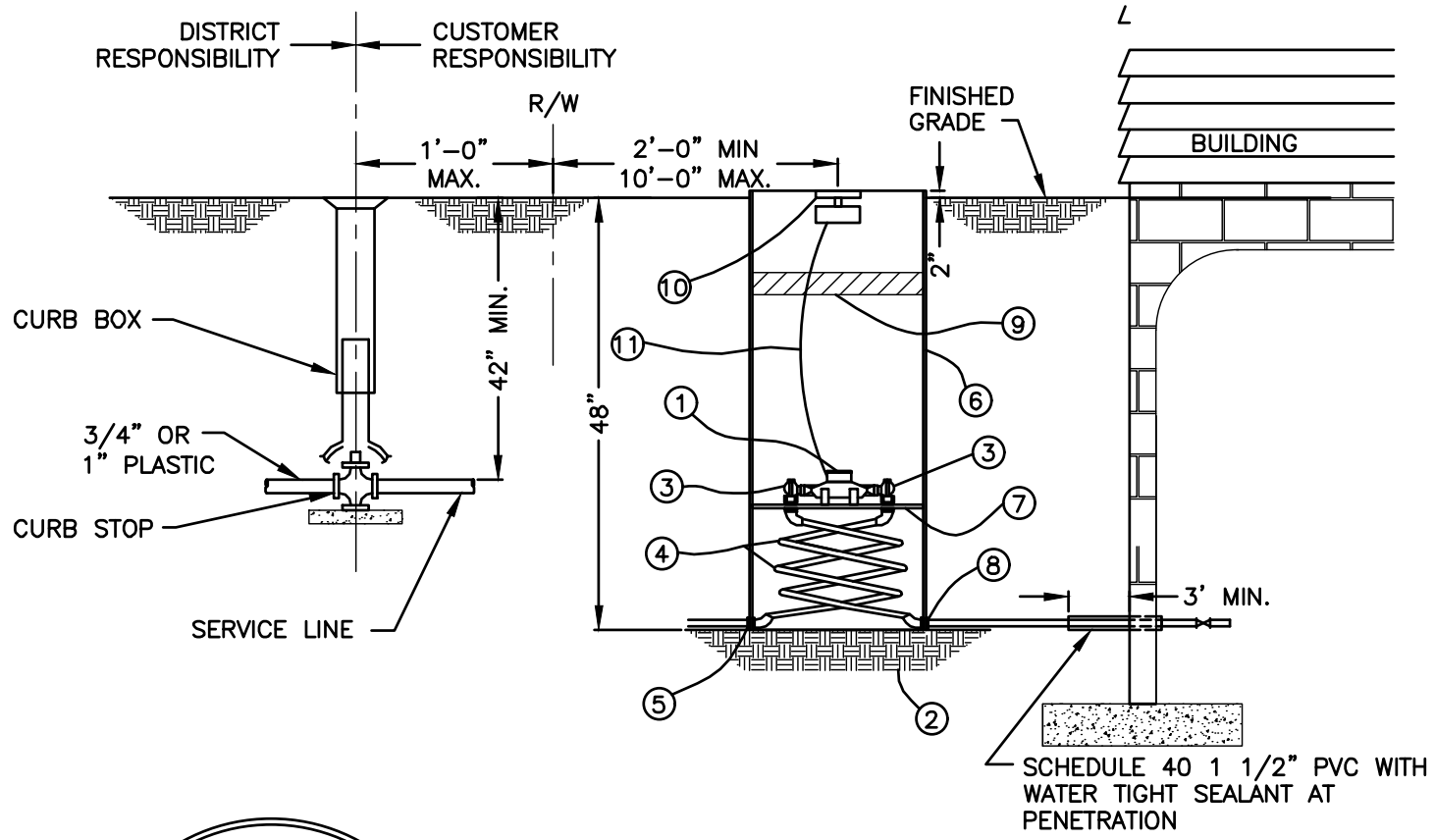

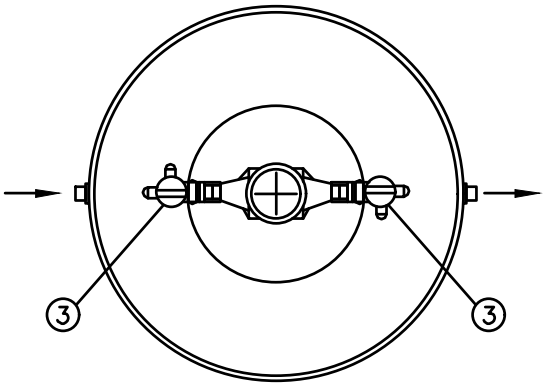

PLAN VIEW

NOTES:

1. RESIDENCES LOCATED IN EXCESS OF 300 FT FROM MAINLINE OR WITH CRAWL SPACE SHALL REQUIRE A METER PIT.

① – 5/8", 3/4", OR 1" METER

② – BACKFILL COMPACTED PRIOR TO SETTING METER BOX.

③ – 3/4" FULL PORT ANGLE BALL VALVE, LOCKABLE MUELLER, #B24265

④ – 3/4" POLYBUTYLENE COILS CLASS 250, ASTM D-2666

⑤ – 3/4" HEX NUT (TYP)

⑥ – 18" DIA. PVC SHELL, MIN. WALL THICK. = 0.366"

⑦ – PVC PLATFORM

⑧ – 3/4" INLET & OUTLET CONNECTIONS

⑨ – 18" x 4" ETHOPAD w/ NYLON STRAP HANDLE

⑩ – McCULLOUGH LID 780112 FOR 3/4" METER OR McCULLOUGH LID 780113 FOR 1" METER WITH R900 RF PIT MIU

⑪ – WIRE SUPPLIED BY THE DISTRICT

⑫ – REGULATOR FOR 203 CT 18 48 LLBS IS A WILKINS MODEL 70 DMSC (CUSTOMER RESPONSIBILITY)

TYPICAL EXTERIOR METER PIT 5/8" TO 1" METERS

Village of Commercial Point	
STANDARD CONSTRUCTION DWG.	
REVISED: 05/14/2018	DRAWING NO. W-36

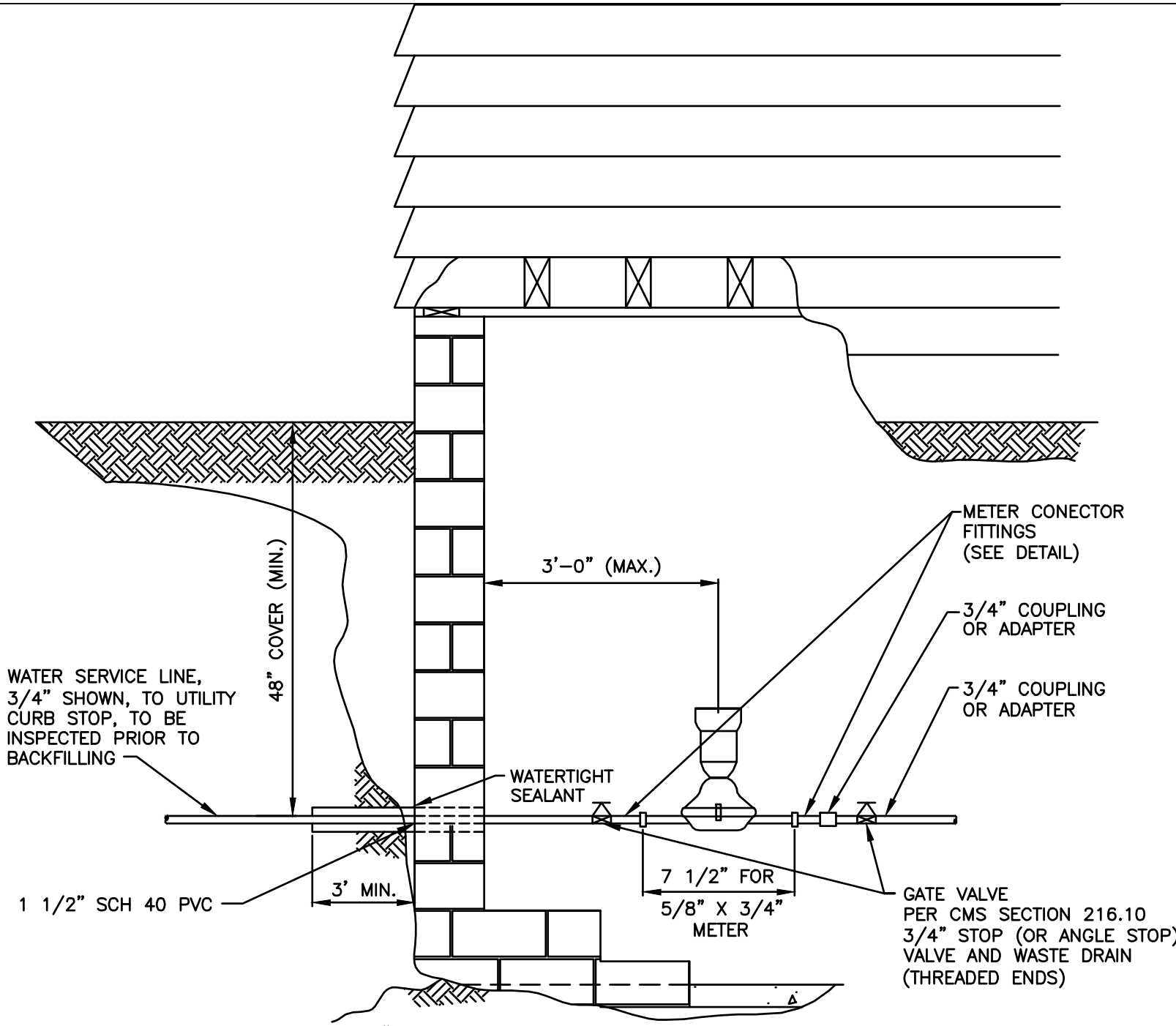

NOTES

1. COMPLETE REGISTER INSTALLATION SHALL BE INSPECTED AND APPROVED BY THE DISTRICT.
2. NO METER BYPASSES ARE PERMITTED.
3. EXTERIOR METER SHALL BE INSTALLED ON THE FRONT OF THE HOUSE FACING THE STREET OR WITHIN 1'-0" OF A CORNER FACING THE STREET.
4. ALL CONDUIT AND PIPING SHALL BE PROPERLY SUPPORTED.
5. PRESSURES GREATER THAN 80PSI SHALL INSTALL A WATTS LF25AUB PRV WITH A WATTS PLT5 EXPANSION TANK.

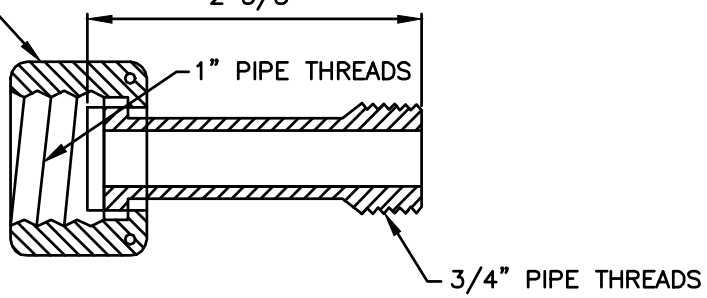

METER CONNECTOR FITTINGS (5/8" X 3/4" METER)

TYPICAL WATER METER (BASEMENT INSTALLATION) 5/8" TO 1"

Village of Commercial Point	
STANDARD CONSTRUCTION DWG.	
REVISED: 05/14/2018	DRAWING NO. W-37

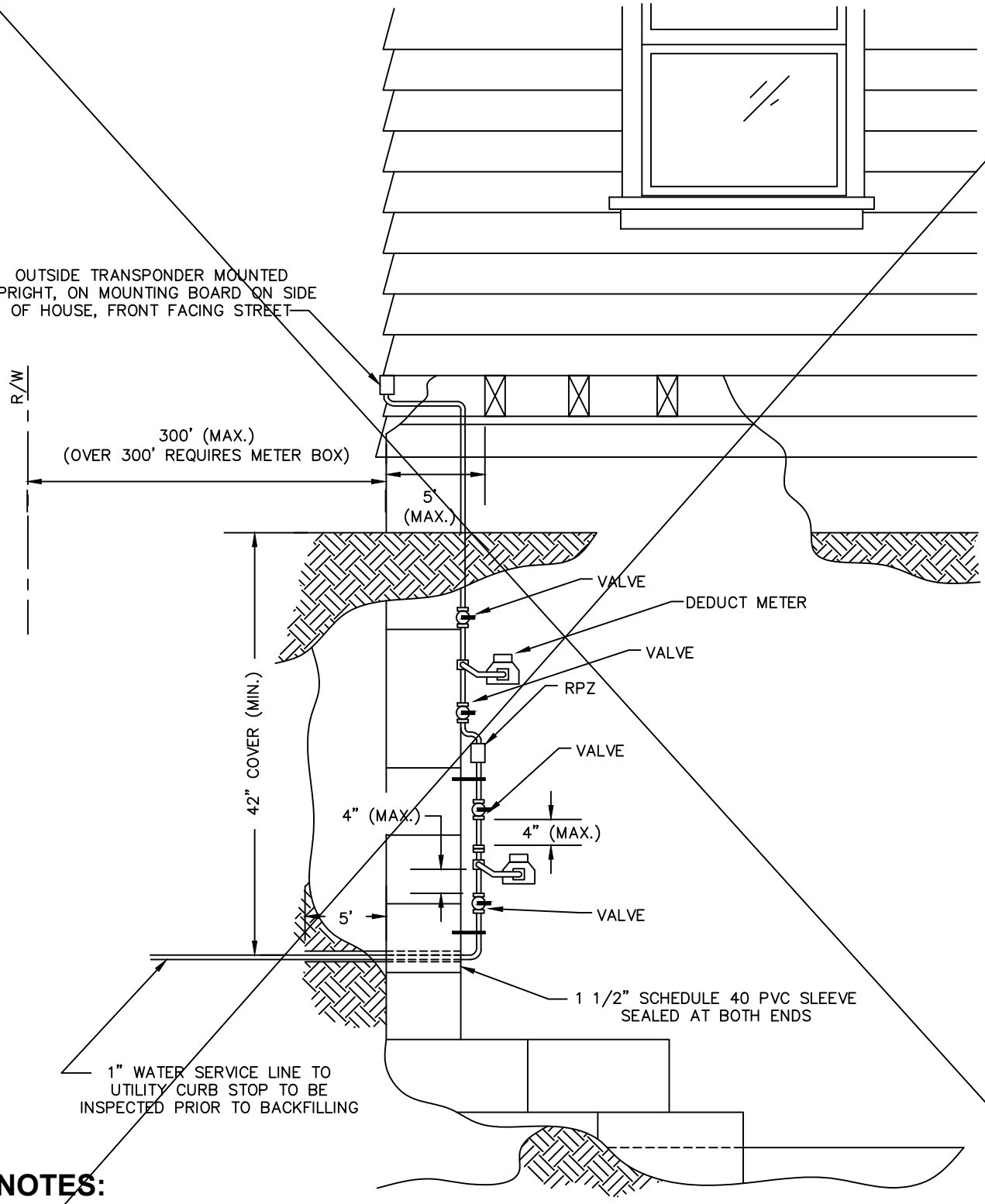

NOTES:

1. INSTALLATION SHALL BE DONE AND INSPECTED AND APPROVED BY THE DISTRICT.
2. NO METER BYPASSES ARE PERMITTED.

TYPICAL DEDUCT METER (BASEMENT INSTALLATION)

Village of Commercial Point	
STANDARD CONSTRUCTION DWG.	
REVISED: 05/14/2018	DRAWING NO. W-38

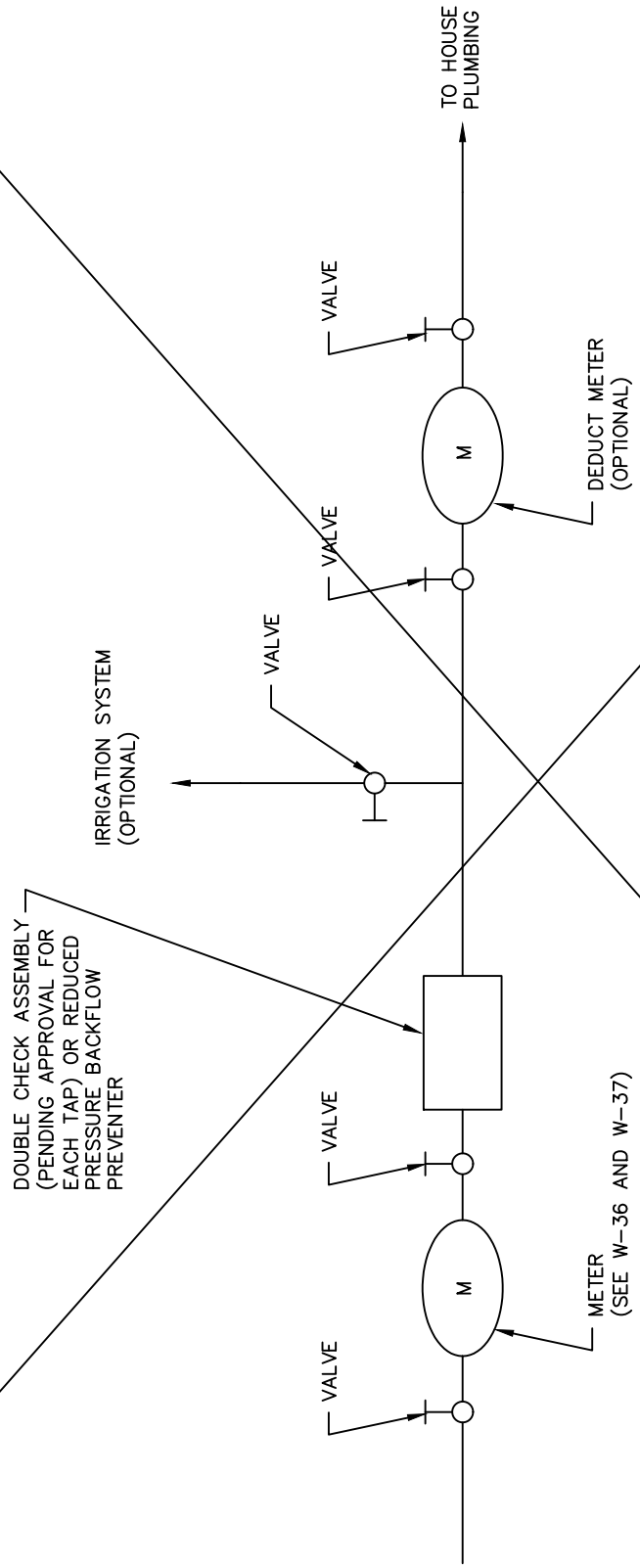

BACKFLOW DEVICE INSTALLATION WITH DEDUCT METER

Village of Commercial Point	
STANDARD CONSTRUCTION DWG.	
REVISED: 05/14/2018	DRAWING NO. W-43

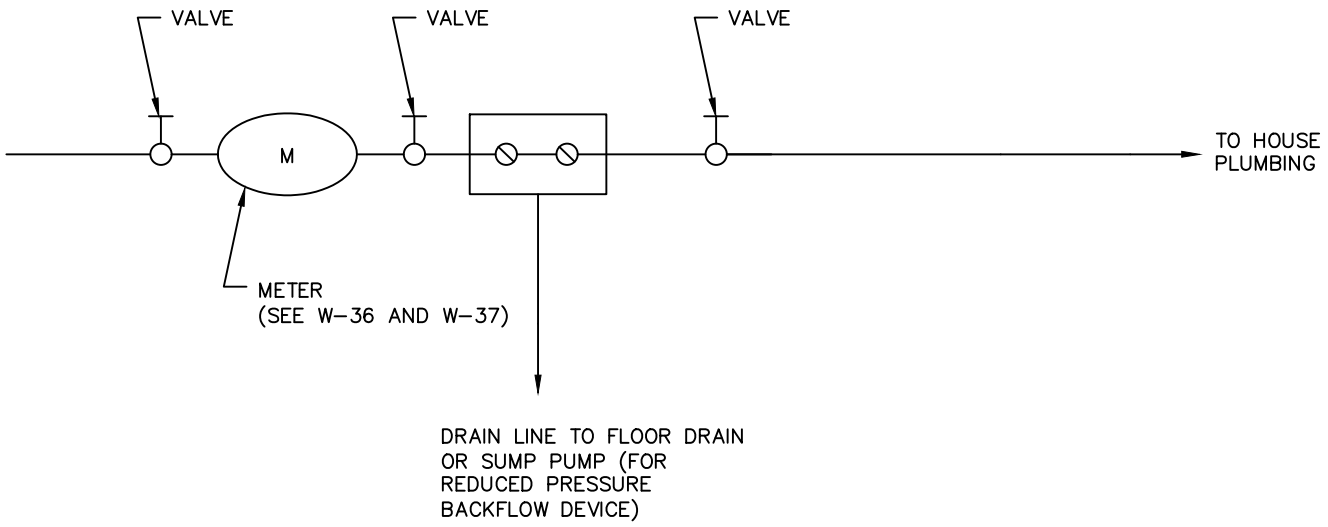

BACKFLOW DEVICE INSTALLATION

Village of Commercial Point	
STANDARD CONSTRUCTION DWG.	
REVISED: 05/14/2018	DRAWING NO. W-44